California Energy Commission
Public Interest Energy Research Program

LBNL-49975
LG-228
HPCBS # E3P2.1T1d2

HPCBS

High Performance Commercial Building Systems

Dimming Every Light Cheaply

Element 3 - Lighting, Envelope and Daylighting
Project 2.1 - Lighting Controls
Task 2.3.1 - Ballast Interfaces

Francis Rubinstein, Judith Jennings - LBNL
Pete Pettler - Vistron LLC
March, 2002

LBNL-49975
LG-228

Presented at the 2002 ACEEE Summer Study on Energy Efficiency in Buildings, August 18-23, 2002, Asilomar Conference Center, Pacific Grove, California, and published in the proceedings.

Dimming Every Light Cheaply

Francis Rubinstein
Judith Jennings
Building Technologies Department
Environmental Energy Technologies Division
Ernest Orlando Lawrence Berkeley National Laboratory
University of California
1 Cyclotron Road
Berkeley, California 94720-8134

Peter Pettler
Vistron LLC
329 Bridge Way
Nevada City, California 95959

March 27, 2002

This work was supported by the Assistant Secretary for Energy Efficiency and Renewable Energy, Office of Building Technology, Building Technologies Program of the U.S. Department of Energy under Contract No. DE-AC03-76SF00098.

Dimming Every Light Cheaply

Francis Rubinstein, Judith Jennings, Lighting Research Group
Building Technologies Department, Environmental Energy Technologies Division
Lawrence Berkeley National Laboratory

Peter Pettler
Vistron LLC, Nevada City, California 95959

Abstract

This paper discusses the successful development and testing of the first ballast/IBECS network interface that will allow commercially-available controllable ballasts to be operated from the Internet via IBECS (Integrated Building Environmental Communications System). The interface, which is expected to cost original equipment manufacturers (OEMs) only about $1-2/unit, has been hardened so that it is impervious to electronic noise generated by most 0-10 VDC controllable ballasts.

Introduction

In a previous paper (Rubinstein, Johnson et al. 2000), we presented the design concept for a low-cost building communications network (IBECS) that would provide inexpensive control of individual light fixtures as well as most other building loads from the Internet. IBECS (Integrated Building Environmental Communications System) lets individual occupants exert control over their environmental conditions while allowing building managers to implement load shedding strategies with confidence.

This paper describes the work performed to design, develop and demonstrate an IBECS network/ballast interface that is useful for economically dimming controllable ballasts in commercial buildings. The first section provides the general background of the IBECS (Integrated Building Environmental Communications System) research and development work as well as the context for the development of the network/ballast interface. The research and development effort to produce the first proof-of-concept circuit and the physical prototype of that concept is detailed in the second section. In the third section, we describe the lessons learned from the first demonstration of the network/ballast interface at an office at Lawrence Berkeley National Laboratory (LBNL). The fourth section describes how electrical noise interference encountered with the first generation of interface led to design changes for a refined prototype that hardened the interface from electrical noise generated by the ballast. The final section discusses the performance of refined prototype after we replaced the proof-of-concept prototype with the refined prototypes in the demonstration office at LBNL.

Background

Lighting controls companies have developed controls products that can be specified as systems to achieve simple lighting control functions in buildings. Research conducted in the late-1990s (Rubinstein, Jennings et al. 1999; Jennings, Rubinstein et al. 2000) demonstrated that products from different manufacturers could be specified, assembled as systems and installed in buildings to achieve simple lighting control functions and obtain significant energy savings. However, the fragmented nature of U.S. lighting controls market is such that manufacturers of lighting controls components (ballasts, switches and controls) produce products that often do not work well together as systems. Thus lighting control equipment for implementing more complex strategies such as daylighting proved difficult to commission in the field, leading to poor operation and user complaints (Floyd and Parker 1995; Love 1995). Failure to involve the occupants in the commissioning process was also thought to result in low occupant acceptance of more advanced lighting control strategies. The software that is necessary to coordinate the operation of lighting control sub-systems is also still immature and current systems lack appropriate networking software (middleware) that would allow sub-systems from different manufacturers to communicate reliably.

To address the above market shortcomings, the overall technical goal IBECS project is to develop an integrated building equipment communications (IBECS) network that will allow appropriate automation of lighting systems to increase energy efficiency, improve building performance, and enhance occupant experience in the space. This network will provide a low-cost means for occupants to control local lighting systems, thereby improving occupant comfort, satisfaction, and performance.

The goal of the IBECS project is to design, build, and test the IBECS interface and networking system between controllable lighting devices that will enable local and system-wide energy-efficient operations of various lighting systems and components.

IBECS Network/Ballast Interface Proof-of-Concept

Any viable system for communicating with building lighting equipment must be able to accommodate the controllable ballasts currently available on the market. There are four dimming ballast types of interest for purposes of dimming lighting control in buildings:

- 0-10 VDC controllable ballasts
- Phase-cut (also called two-wire) ballasts
- Three-wire ballasts
- Digital ballasts

The phase-cut ballasts, though less expensive than the other types of controllable ballasts, might increase current harmonic content in building electrical wiring systems if installed throughout a facility. Three-wire ballasts, while of very high quality, cannot be dimmed using low-voltage circuits. Digital ballasts, though eventually the ideal vehicle for IBECS control, were thought to be a too limited market at this time. So for our initial interface development work, we elected to focus on the 0-10 VDC controllable ballasts.

How Controllable Ballasts Operate

Commercially available dimming ballasts are equipped with two extra leads for controlling the intensity of the lamps. These extra leads form a two-wire low-voltage "bus", to which various control devices can be connected. For example, an appropriate photocell connected to the bus can control ballast light output by varying the voltage on the bus. Usually several ballasts are connected in parallel to the low-voltage bus so they can be controlled in unison from a single controller or photocell (see **Figure 1**).

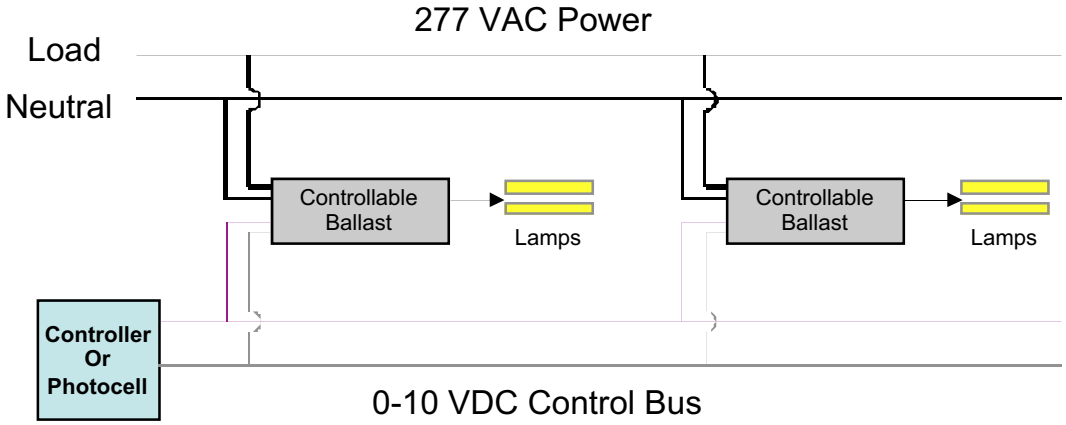

Figure 1. Wiring diagram for the low-voltage control circuit used in most commercially available 0-10 VDC controllable fluorescent lamp ballasts.

Designing the first interface

Our initial task was to design a proof-of-concept interface that would allow control of the 0-10 VDC controllable ballast from a digital LAN. Our market reserach identified Dallas Semiconductor as the manufacturer with the hardware (microchips) and the communications LAN (1-wire LAN) that was most appropriate to our purpose.

One of us (Pettler) designed the ballast network interface around the microchip set from Dallas Semiconductor. The initial circuit design proof-of-concept was as shown in **Figure 2** below.

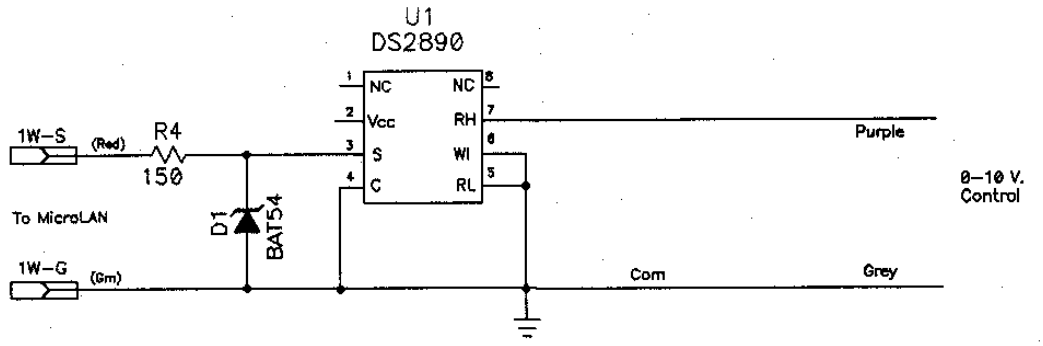

Figure 2. Circuit diagram for first proof-of-concept for the IBECS network/ballast interface.

The above circuit contains the Dallas Semiconductor DS 2890 digital potentiometer along with the other circuitry required to serve as the network interface for any 0-10 VDC controllable fluorescent ballast that can source current (most commercially available controllable ballasts are able to do this). Consequently, the network interface above requires no additional power. The power to drive the communications portion of the digital pot is borrowed from the MicroLan itself. The current to drive the dimming portion is provided by the current sourced from the controllable ballast. The technical specifications for the Dallas Semiconductor digital potentiometer can be found at http://pdfserv.maxim-ic.com/arpdf/DS2890.pdf. Note the selection of this company's hardware to construct the interface does not imply that there are not other companies that have similar products and capabilities.

We packaged the above circuit in plastic as shown in **Figure 3**. The two solid copper leads connect to the purple and grey wires from the controllable ballast. The pigtail wires connect to the microLAN. Once the microLAN is installed (using CAT5 cable or equivalent), each ballast to be controlled would be wired to an interface and the interface wired to the microLAN.

Figure 3. The first IBECS network/ballast interface for communicating digitally with controllable fluorescent ballasts. The blue and white wires coming out of the top of the interface connect to the purple and grey leads on a controllable ballast. The blue and white pigtails go to the digital microLAN.

Demonstration of Proof-of-Concept Prototype at LBNL Office

To test the above network interface, we installed six of the interfaces to control the overheads lights in an office at LBNL's Building 46. The office consisted of four three-lamp luminaires that were tandem wired so that the in-board and out-board lamps could be separately switched using two manual wall switches. (Tandem wiring is code for non-residential California buildings under Title 24).

To test the IBECS network/ballast interfaces, the existing six, two-lamp, non-dimming, ballasts were replaced with 0-10 VDC two-lamp controllable ballasts from Magnetek. Each of the six installed dimming ballasts was equipped with a ballast network interface so it could be individually controlled. In addition, the electricians installed a low-voltage CAT-5 cable wire in a surface-mounted raceway connecting all the ballast interfaces. We terminated one end of the microLAN with an RS-232/microLAN bridge near the occupant's personal computer so that the occupant could dim the overhead lights to taste using IBECS. To complete the demonstration, we connected the bridge (HA3 adaptor from Point Six) at the end of the run to the serial port on the PC where we installed the 1-wire control software from Advantech and the DDE server (also from Point Six). We produced a simple control screen using the Advantech software that let us control 1-wire devices from the PC.

Our tests of the first interface were disappointing. Electronic noise generated by the ballast and injected back onto the low-voltage control circuit added a large noise signature onto the digital microLAN. Because each ballast is connected in parallel to the low-voltage circuit, the noise generated by each adds to the overall noise level. This noise swamped the signal level on the digital microLAN, this prevented the digital microLAN from communicating with the network interfaces. We did not detect this problem with our initial IBECS demonstration kit because that kit controlled only one interface and the wire runs were very short. Once we identified the noise problem described above, we tested several other types of controllable ballasts and found that these ballasts also generated unacceptable electronic noise levels, although we found that the noise signature of different ballasts varied significantly. Our first solution was to add capacitors at the interface input terminals. However, this did not prove to be a reliable solution.

Development of the Refined Prototype

To solve the ballast noise interference problem, we modified the interface circuit to optically isolate the interface from noise interference generated by the controllable ballast. We redesigned the circuit so that the digital potentiometer would control the ON-OFF ratio of a pulse width modulated (PWM) signal transmitted to the 0-10 volt input of the ballast(s) as shown in **Figure 4**.

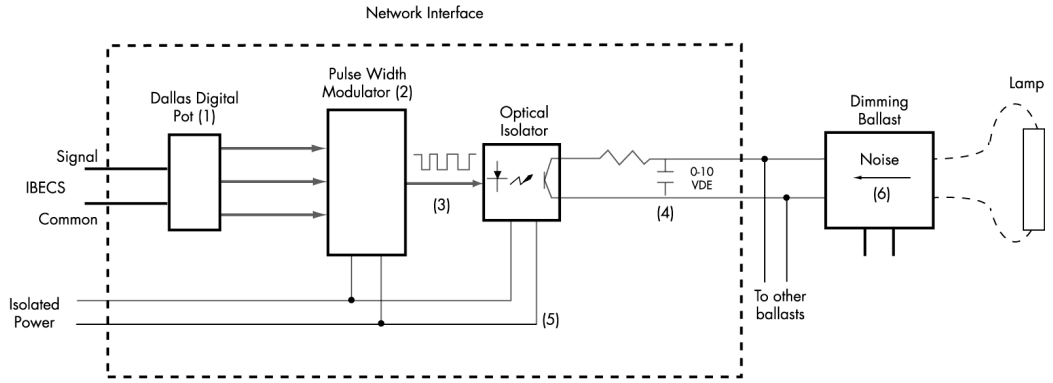

(1) Dallas Semiconductor's V2890 digital potentiometer (6 pin)
(2) Single CMOS Integrated Circuit
(3) Fixed frequency output at approximately 200Hz with variable symmetry
(4) This single pole filter crudely converts pulse width modulation to 1-10V current sinking control
(5) Each dimmng interface requires approximately 50 milliwatts of external power
(6) Any noise generated in the ballast cannot pass the optical isolator

Figure 4. Block diagram of the revised IBECS network/ballast interface designed to eliminate noise from the electronic ballast.

Since both the pulse width modulator and the optical isolator require external power (the digital pot does not), the above network interface requires a powered, i.e., four-wire IBECS network. Note that this is a departure from the initial prototype, which did not require any external power. Since the two obvious candidates for IBECS network cable (CAT 5 or standard Telco wiring) already contain at least 4 conductors, the cost per linear foot of network cable is only marginally more expensive with four wires than with two. The added robustness of the 4-wire system would more than make up for any marginal increases in wiring costs. The final refined prototype is shown in **Figure 5**. The total cost of the interface is estimated to be about $2 to manufacture. This cost includes the cost of the microchip, three integrated circuits, various electrical components, the printed circuit board and the RJ-11 connector (at $0.30, the connector is the most expensive part).

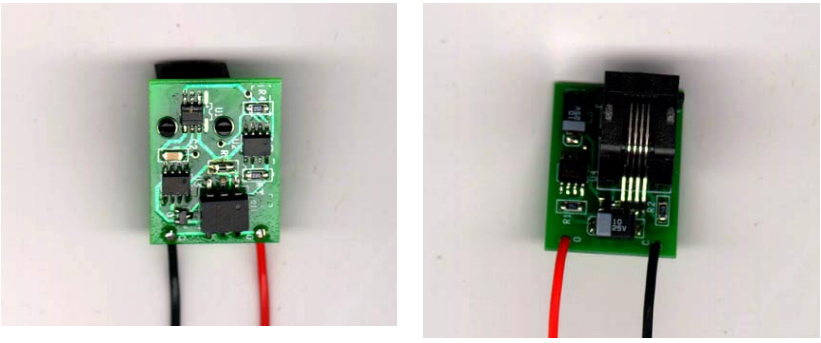

Figure 5. Bottom and top views of the final refined IBECS network/ballast interface. The red and black wires connect to the low-voltage "poke-thru" connector on the controllable ballast, while the IBECS microLAN plugs into the black RJ-11 connector on the top of the interface.

Demonstrated Performance of the Refined Prototype

To determine whether we had successfully fixed the noise problem, we replaced the old interfaces in the test office with the redesigned IBECS network/ballast interfaces We also added instrumentation voltage to the low-voltage cable using a simple DC power supply (called, curiously, a "wall wart").

We found that the refined IBECS network/ballast interfaces worked very reliably in our test office. Not only could we control each ballast exactly as desired, but the lights dimmed very quickly without any discernable delay. All of the noise problems encountered with the first design have been eliminated. Though not tested on other types of ballasts, we expect that the optical isolation techniques that we have employed should work for most 0-10 VDC controllable ballasts on the market today.

One practical aspect of this demonstration needs further comment. By supplying a very small voltage (about 2 volts) from the interface, we could dim the ballasts past the point of reliable operation (about 10% light output). Below 10% light output, the lamps would blacken and fail rapidly since the ballast was unable to maintain sufficient cathode voltage. Fortunately, this problem was easy to fix in software.

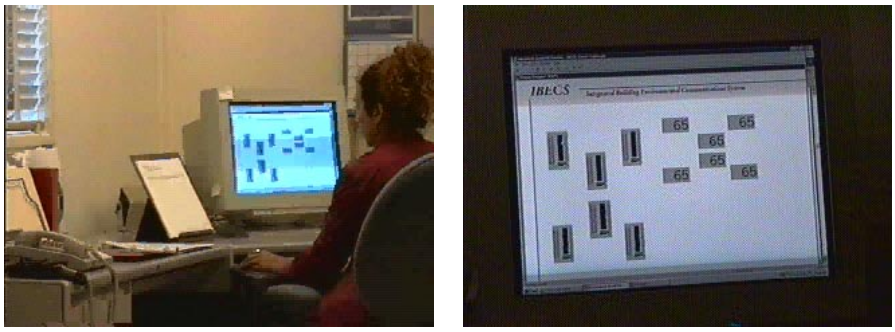

Figure 6. Left image shows occupant using IBECS to change the dim levels of the overhead lights using the computer. The right image is a closeup of the IBECS control screen. Note the six "sliders" on the left portion of the image each corresponding to a separately controlled ballast.

Simply by limiting the dimming level to a more modest voltage (something easily done in software, but difficult and expensive to change in hardware), we could use the IBECS control software to ensure that the ballast operate only over the good performance range. This is another advantage to the IBECS approach. Even if the light equipment is physically capable of operating the lamps at too low a light level, the IBECS control software can be tweaked easily by the installer to prevent the lamps from dimming too low.

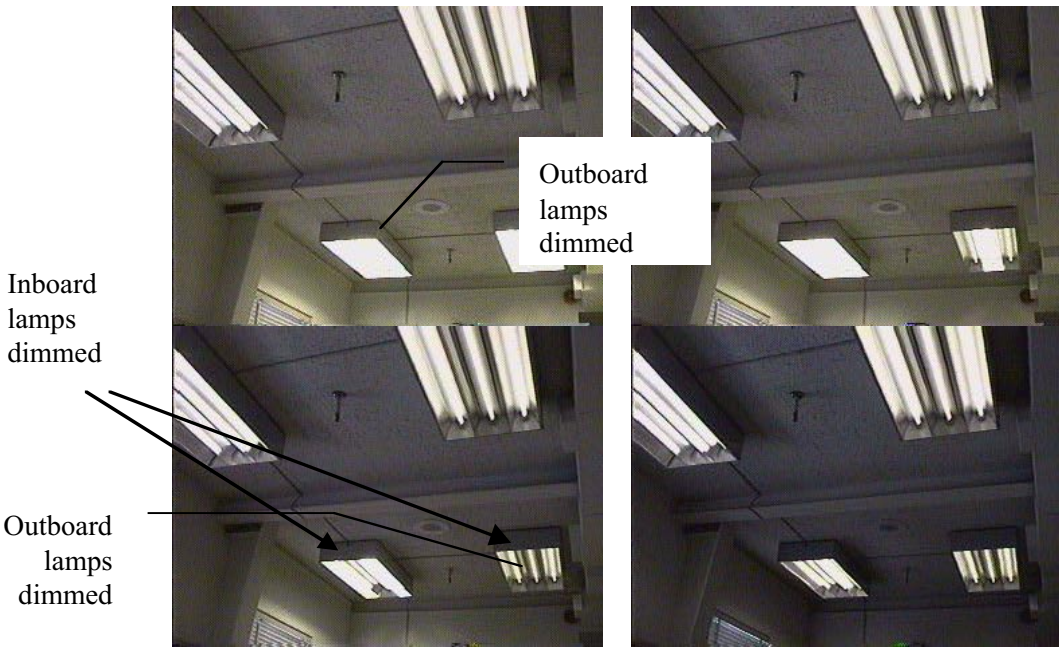

Figure 7. Upper left image shows the bottommost fixtures at full intensity (the topmost fixtures were set to low intensity in all images). Callouts indicate the dim state of the lights in the other two images. The lower right image shows all ballasts operating in fully dimmed state

Conclusion

We developed, refined, and demonstrated an IBECS network/ballast interface that is useful for economically dimming controllable ballasts. We learned that available silicon microchips and the associated communications network are a suitable platform for developing low-cost digital network/ballast interfaces well suited for network operation of commercially available dimming ballasts. We found that electrical noise generated by the ballast in the 0-10 VDC controllable loop can interfere with digital network operation unless the interface is hardened from this noise. Using optical isolation, we produced a refined IBECS network/ballast interface that can provide universal control of most available 0-10 VDC controllable ballasts. In quantities, we estimate that the cost of the universal IBECS network/ballast interface would be about $1 to $2 to OEMs. This is five to ten times less costly per unit than any other proposed communications system that we are familiar with.

Acknowledgement

This work was supported by the Assistant Secretary for Energy Efficiency and Renewable Energy, Office of Building Technology, State and Community Programs, Office of Building Research and Standards of the U.S. Department of Energy under Contract No. DE-AC03-76SF00098.

References

Floyd, D. and D. Parker (1995). "Field Commissioning of a Daylight-Following Lighting System." *3rd European Conference on Energy-Efficient Lighting*, Newcastle upon Tyne, England.

Jennings, J. D., F. M. Rubinstein, et al. (2000). "Comparison of control options in private offices in an advanced lighting controls testbed." *Journal of the Illuminating Engineering Society* **29**(2): 39-60.

Love, J. (1995). "Field Performance of Daylighting Systems with Photoelectric Controls". *3rd European Conference on Energy Efficient Lighting*, Newcastle upon Tyne, England.

Rubinstein, F., J. Jennings, et al. (1999). "Preliminary results from an advanced lighting controls testbed." *Journal of the Illuminating Engineering Society* **28**(1): 130-141.

Rubinstein, F. M., S. J. Johnson, et al. (2000). "IBECS: An Integrated Building Environmental Communications System—It's Not Your Father's Network". *ACEEE Summer Study*, Pacific Grove, CA.