California Energy Commission
Public Interest Energy Research Program

LBNL-53410
HPCBS # E4P22T1

HPCBS

High Performance Commercial Building Systems

Duct Thermal Performance Models

Element 4. Low Energy Cooling
Project 2.2 - Efficient Distribution Systems

Craig Wray
Lawrence Berkeley National Laboratory
October, 2003

LBNL-53410

Duct Thermal Performance Models for Large Commercial Buildings

Craig Wray

Environmental Energy Technologies Division
Indoor Environment Department
Lawrence Berkeley National Laboratory
Berkeley, CA 94720

October 2003

This report describes work supported by the California Energy Commission through the Public Interest Energy Research program under contract no. 400-99-012-1, and by the Assistant Secretary for Energy Efficiency and Renewable Energy, Building Technologies Program, of the U.S. Department of Energy under contract no. DE-AC03-76SF00098.

The Lawrence Berkeley National Laboratory, 1 Cyclotron Road, Berkeley, CA 94720 is a national laboratory of the U.S. Department of Energy managed by the Regents of the University of California for the U.S. Department of Energy under Contract Number DE-AC03-76SF00098. This report was prepared as a result of work sponsored by the California Energy Commission (Commission). It does not necessarily represent the views of the Commission, its employees, or the State of California. The Commission, the State of California, its employees, contractors, and subcontractors make no warranty, express or implied, and assume no legal liability for the information in this report, nor does any party represent that the use of this information will not infringe upon privately owned rights. This report has not been approved or disapproved by the Commission nor has the Commission passed upon the accuracy or adequacy of the information in this report.

THE GOVERNMENT AND THE CONTRACTOR MAKE NO EXPRESS OR IMPLIED WARRANTY AS TO THE CONDITIONS OF THE RESEARCH OR ANY INTELLECTUAL PROPERTY, GENERATED INFORMATION, OR PRODUCT MADE OR DEVELOPED UNDER THIS AGREEMENT, OR THE OWNERSHIP, MERCHANTABILITY, OR FITNESS FOR A PARTICULAR PURPOSE OF THE RESEARCH OR RESULTING PRODUCT; THAT THE GOODS, SERVICES, MATERIALS, PRODUCTS, PROCESSES, INFORMATION, OR DATA TO BE FURNISHED HEREUNDER WILL ACCOMPLISH INTENDED RESULTS OR ARE SAFE FOR ANY PURPOSE INCLUDING THE INTENDED PURPOSE; OR THAT ANY OF THE ABOVE WILL NOT INTERFERE WITH PRIVATELY OWNED RIGHTS OF OTHERS. NEITHER THE GOVERNMENT NOR THE CONTRACTOR SHALL BE LIABLE FOR SPECIAL, CONSEQUENTIAL, OR INCIDENTAL DAMAGES ATTRIBUTED TO SUCH RESEARCH OR RESULTING PRODUCT, INTELLECTUAL PROPERTY, GENERATED INFORMATION, OR PRODUCT MADE OR DELIVERED UNDER THIS AGREEMENT.

ACKNOWLEDGEMENTS

The largest debt of gratitude goes to former and current Energy Performance of Buildings staff members: Ellen Franconi (Nexant Corporation) for her development of the DOE-2 / TRNSYS modeling approach and for implementing the duct models in a form that could readily be used in this project; to Iain Walker (LBNL) for his assistance in defining the duct surface heat transfer models described in the body of this report; Nance Matson (LBNL) for her review and refinement of the DOE-2 data interchange with TRNSYS; and Brian Smith (LBNL) for computer applications support throughout the project.

LBNL staff members in the Building Technologies Department were also helpful and supportive of this work, particularly regarding the intricacies of DOE-2.1E and EnergyPlus. The author wishes to thank Phil Haves, Fred Winklemann, Fred Buhl, Joe Huang, and Steve Selkowitz.

The duct modeling discussions with Lixing Gu, Jim Cummings, Muthusamy Swami, and Don Shirey of the Florida Solar Energy Center and Pete Jacobs of the Architectural Energy Corporation helped define the approaches that we selected for duct thermal performance modeling in large commercial buildings, and the author is grateful for their input.

Advice from Michaël Kummert of the Solar Energy Laboratory, University of Wisconsin-Madison regarding TRNSYS compiling issues was greatly appreciated; as was the explanation by Tim McDowell of Thermal Energy System Specialists about the details involved in coupling TRNSYS and EnergyPlus.

This project evolved from the ideas and work of Mark Modera (LBNL), who was the original project lead. Even after he left the project, Mark continued to provide contributions and was a valuable resource for the project team.

Finally, the author would like to acknowledge the support and contributions of the PIER Contract Manager, Martha Brook, and the Buildings Program team under the leadership of Nancy Jenkins.

TABLE OF CONTENTS

ACKNOWLEDGEMENTS i

EXECUTIVE SUMMARY 1

1. INTRODUCTION 3

1.1 Background 3
1.2 Project Objectives 3
1.3 Report Organization 4

2. MODELING CONTEXT 5

2.1 California Title 24 – Compliance Path Overview 5
2.2 California Duct Systems 6
2.3 Effects of Duct Deficiencies 7
2.4 Duct System Performance Principles 8
2.4.1 Duct Air Leakage 8
2.4.2 Fan Performance 10
2.4.3 Duct Surface Heat Transfer 11

3. REVIEW OF MODEL IMPLEMENTATIONS 13

3.1 DOE-2.1E 13
3.2 Other Commercially Available Simulation Programs 14
3.2.1 DOE-2.2 14
3.2.2 EnergyPlus 15
3.3.3 TRNSYS 16

4. PROJECT OUTCOMES 19

4.1 Recommended Short-Term Modeling Approach 19
4.2 Recommended Long-Term Modeling Approach 19
4.3 Recommendations for Future Work 20

GLOSSARY 22

APPENDIX I: BIBLIOGRAPHY 23

APPENDIX II: TRNSYS DUCT PERFORMANCE SUBROUTINES 38

Subroutine TYPE 70: Fan (Supply or Return) 38
Subroutine TYPE 75: Cooling Coil 44
Subroutine TYPE 77: Zone Return Air Mixing 82
Subroutine TYPE 80: Economizer 84
Subroutine TYPE 81: Ceiling Return Plenum 93
Subroutine TYPE 82: Upstream Ducts 96
Subroutine TYPE 86: VAV Box and Downstream Ducts 100

EXECUTIVE SUMMARY

Introduction. Despite the potential for significant energy savings by reducing duct leakage or other thermal losses from duct systems in large commercial buildings, California Title 24 has no provisions to credit energy-efficient duct systems in these buildings. A substantial reason is the lack of readily available simulation tools to demonstrate the energy-saving benefits associated with efficient duct systems in large commercial buildings.

Purpose. The overall goal of the Efficient Distribution Systems (EDS) project within the PIER High Performance Commercial Building Systems Program is to bridge the gaps in current duct thermal performance modeling capabilities, and to expand our understanding of duct thermal performance in California large commercial buildings. As steps toward this goal, our strategy in the EDS project involves two parts: 1) developing a whole-building energy simulation approach for analyzing duct thermal performance in large commercial buildings, and 2) using the tool to identify the energy impacts of duct leakage in California large commercial buildings, in support of future recommendations to address duct performance in the Title 24 Energy Efficiency Standards for Nonresidential Buildings.

Project Objectives. The specific technical objectives for the EDS project were to:

1. Identify a near-term whole-building energy simulation approach that can be used in the impacts analysis task of this project (see Objective 3), with little or no modification. A secondary objective is to recommend how to proceed with long-term development of an improved compliance tool for Title 24 that addresses duct thermal performance.
2. Develop an Alternative Calculation Method (ACM) change proposal to include a new metric for thermal distribution system efficiency in the reporting requirements for the 2005 Title 24 Standards. The metric will facilitate future comparisons of different system types using a common "yardstick".
3. Using the selected near-term simulation approach, assess the impacts of duct system improvements in California large commercial buildings, over a range of building vintages and climates. This assessment will provide a solid foundation for future efforts that address the energy efficiency of large commercial duct systems in Title 24.

This report describes our work to address Objective 1, which includes a review of past modeling efforts related to duct thermal performance, and recommends near- and long-term modeling approaches for analyzing duct thermal performance in large commercial buildings. Modera (2002) and Wray and Matson (2003) respectively describe work to address Objectives 2 and 3.

Project Outcomes

Recommended Short-Term Modeling Approach. Our review of 189 documents related to past modeling efforts, and supplemental discussions with other simulation experts, has helped define a set of modeling principles that can be used to guide duct thermal performance modeling for large commercial buildings. Based on this review, we conclude that the best approach for our impacts analysis task is to build upon past research that used DOE-2 and TRNSYS in a sequential method to evaluate HVAC system performance.

An advantage of this approach is that DOE-2 prototypical models for a large commercial California building are available, as are TRNSYS component models that LBNL developed in the past to model duct leakage effects in VAV systems. Another advantage is that this modeling approach and its results for a California building have already been validated, and no substantial changes are required to the simulation tool to carry out our impacts analysis. No other whole-

building modeling approach to assess duct system performance for large commercial buildings is currently as advanced as this approach. To assist other modelers, this report presents the source code for the TRNSYS component models, which were never published.

Recommended Long-Term Modeling Approach. Although DOE-2.1E Version 110 is the reference simulation tool for Title 24 compliance evaluations, we have concluded that its duct modeling limitations, convoluted structure, and the lack of government support for future development make it unsuitable as a platform for long-term modeling of duct thermal performance in large commercial buildings. Instead, we have suggested that EnergyPlus, which is based in part on DOE-2, be developed to include component models like the TRNSYS ones that we identified for short-term use in our impacts analysis task. Currently, EnergyPlus has no duct performance models, but we expect that the recommended enhancements could be applied in a relatively straightforward manner. This approach has the advantage that EnergyPlus is better suited than DOE-2.1E for future analyses of innovative low-energy cooling designs.

Our recommendation carries with it a set of challenges that need to be met by the summer of 2005 if EnergyPlus is to be used in support of the 2008 Title 24 Standards: 1) an interface needs to be rapidly developed to facilitate program use in Title 24 compliance analyses, 2) duct performance models need to be integrated with the program, 3) EnergyPlus needs to be validated against measured data and certified as either an alternative or primary compliance analysis tool, and 4) utilities to convert DOE-2 input files for use in EnergyPlus are needed to help current DOE-2.1E users migrate to using EnergyPlus. Further collaborative efforts between DOE and the California Energy Commission would help ensure that these challenges can be met, and would likely lead to substantial energy reduction benefits in California over the long-term.

Recommendations for Further Work. Before duct performance in large commercial buildings can be accounted for in Title 24 nonresidential building energy standards, several issues must be addressed and resolved. These include:

1. Specifying reliable duct air leakage measurement techniques that can be practically applied in the large commercial building sector.
2. Defining the duct leakage condition for the standard building used in Title 24 compliance simulations.
3. Assuring consistency between simulated duct performance impacts and actual impacts.
4. Developing compliance tests for the Alternative Calculation Method (ACM) Approval Manual (CEC 2001b) to evaluate duct performance simulations.

Three additional steps will be required to further develop duct-modeling capabilities that address limitations in existing models and to initiate strong market activity related to duct system improvements. We recommend that these steps include:

1. Implementing duct models in user-friendly commercially-available software for building energy simulation, validating the implementations with case studies and demonstrations, and obtaining certification for software use as a primary or alternative compliance tool in support of the Title 24 Nonresidential Standards.
2. Developing methodologies to deal with airflows entering VAV boxes from ceiling return plenums (e.g., parallel fan-powered VAV boxes), to deal with duct surface heat transfer effects, and to deal with static pressure reset and supply air temperature reset strategies.
3. Transferring information to practitioners through publications, conferences, workshops, and other education programs.

1. INTRODUCTION

1.1 Background

Previous research suggests that duct systems in California commercial buildings suffer from a number of problems, such as thermal losses due to duct air leakage. For example, measurements by Diamond et al. (2003) in a large commercial building confirmed predictions by Franconi et al. (1998) that duct leakage can significantly increase HVAC system energy consumption: adding 15% duct leakage at operating conditions leads to a fan power increase of 25 to 35%. Diamond et al. also estimated that eliminating duct leakage airflows in half of California's existing large commercial buildings has the potential to save about 560 to 1,100 GWh annually ($60-$110 million per year or the equivalent consumption of 83,000 to 170,000 typical California houses), and about 100 to 200 MW in peak demand.

California Title 24, Part 6 (CEC 2001a) is one of the most advanced energy codes in the United States. The impacts of duct thermal performance in residences are already addressed by Title 24 compliance procedures; duct-system energy efficiency requirements have recently been added for small commercial buildings with individual packaged equipment serving 5,000 ft^2 or less where ducts are located in spaces between insulated ceilings and the roof, or outside the building; and new requirements for duct performance in other small commercial buildings are being developed. However, despite the potential for significant energy savings by reducing thermal losses from duct systems in large commercial buildings, Title 24 has no provisions to credit energy-efficient duct systems in these buildings. A substantial reason is the lack of readily available simulation tools to demonstrate the energy-saving benefits associated with efficient duct systems in large commercial buildings.

1.2 Project Objectives

The work reported here is part of the Efficient Distribution Systems (EDS) project within the PIER High Performance Commercial Building Systems Program. The EDS project goal is to bridge the gaps in duct system modeling capabilities, and to expand our understanding of duct thermal performance in California's large commercial buildings, by following through on the strategy outlined by Xu et al. (1999a). As steps toward this goal, the project involves three specific technical objectives:

1. Identify a near-term whole-building energy simulation approach that can be used in the impacts analysis task of this project (see Objective 3), with little or no modification. A secondary objective is to recommend how to proceed with long-term development of an improved compliance tool for Title 24 that addresses duct thermal performance.
2. Develop an Alternative Calculation Method (ACM) change proposal to include a new metric for thermal distribution system efficiency in the reporting requirements for the 2005 Title 24 Standards. The metric will facilitate future comparisons of different system types using a common "yardstick".
3. Using the selected near-term simulation approach, assess the impacts of duct system improvements in California large commercial buildings, over a range of building vintages and climates. This assessment will provide a solid foundation for future efforts that address the energy efficiency of large commercial duct systems in Title 24.

To meet these objectives, we carried out the EDS project in steps. Work to address Objectives 1 and 2 was carried out in parallel, and was followed by work on Objective 3. This report describes our efforts related to Objective 1:

- Carrying out a review of documents related to past HVAC system modeling efforts, supplemented by discussions on these issues with other simulation experts;
- Defining a set of modeling principles and publishing HVAC component models that can be used now to guide duct thermal performance modeling for large commercial buildings; and
- Identifying what aspects can be carried forward for use in Title 24 compliance processes related to large commercial buildings.

The efforts related to Objective 1 are necessary precursors to assessing the impacts of duct system improvements in California large commercial buildings, which is the focus of Objective 3. A follow-on report by Wray and Matson (2003) describes the latter effort in detail[1].

Regarding Objective 2, the California Energy Commission has accepted the ACM change that Modera (2002) proposed for the 2005 Title 24 Standards to address HVAC distribution system efficiency in large commercial buildings. The metric of interest, HVAC Transport Efficiency, characterizes the overall efficiency of the thermal distribution system as the ratio between the energy expended to transport heating, cooling, and ventilation throughout a building and the total thermal energy delivered to the various conditioned zones in the building. Because the ACM proposal is for a set of reporting changes, implementing the changes in existing Title 24 non-residential compliance software should not require significant effort from ACM providers.

This project contributes to the PIER program objective of improving the energy cost and value of California's electricity in two ways. One is by developing analytical methods to show that well designed duct systems in large commercial buildings can save much of the energy used to move and condition air. The other is by making progress toward new requirements for commercial duct system efficiency in future revisions of Title 24. We expect that the new analytical capabilities and performance requirements will ultimately result in smaller capacity, more energy-efficient building systems, which will also reduce peak electrical demand from California's commercial building sector and improve the reliability and quality of California's electricity.

1.3 Report Organization

In **Section 2, Modeling Context**, we discuss issues that delineate modeling needs, and that provide rationale for selecting near- and long- term modeling approaches.

In **Section 3, Modeling Reviews**, we present the key results from our review.

In **Section 4, Conclusions and Recommendations**, we present what we learned from the research and what we recommend for future activities.

Following the **Glossary**, there are two **Appendices**:

> "**Appendix I.** Bibliography" lists the 189 documents related to HVAC air-handling system performance simulation and assessment that we reviewed in our search for information about duct thermal performance modeling.

[1] Wray, C.P. and N.E. Matson. 2003. "*Duct Leakage Impacts on VAV System Performance in California Large Commercial Buildings*". Lawrence Berkeley National Laboratory Report. LBNL-53605.

Particularly relevant documents are:

- Past efforts that assessed DOE-2 capabilities for modeling ducts in commercial buildings (Modera et al. 1999, Xu et al. 1999a),
- A recent doctoral dissertation that used DOE-2 and TRNSYS to model duct thermal losses in large commercial buildings (Franconi 1999),
- Recent DOE-2.2 modeling efforts that assessed duct system improvements for small commercial buildings (PG&E 2003a, 2003b), and
- Discussions of residential duct thermal models (Gu et al. 1998a, 1998b), which are the basis for a recent proposal by the Florida Solar Energy Center to integrate duct thermal performance modeling into EnergyPlus for residential and small-commercial buildings.

To supplement these reviews, we also hosted several conference calls and meetings between LBNL and Florida Solar Energy Center staff to map out a long-term strategy for adding duct-modeling capabilities into EnergyPlus for large-commercial buildings.

"**Appendix II.** TRNSYS Duct Performance Subroutines" lists the FORTRAN source code implementations of the seven models that Franconi (1999) used in a DOE-2 / TRNSYS simulation approach to predict the effects of duct leakage on HVAC system performance.

2. MODELING CONTEXT

The background information in this section serves as a basis for evaluating and selecting methods that evaluate duct performance impacts. We first summarize the two different compliance paths in Title 24 to help the reader understand the reasons why one needs simulation tools to evaluate duct performance. Next, we describe duct system types that are common in California's large commercial buildings, present an example to illustrate the effects of duct system deficiencies, and describe the underlying principles that govern duct performance.

2.1 California Title 24 – Compliance Path Overview

Two compliance paths are available for non-residential buildings that are subject to California Title 24 requirements:

1. The simplest approach is *prescriptive*: compliance is achieved by designing and constructing the building to meet specified minimum characteristics for the envelope, space-conditioning system, hot-water heating system, and lighting system.
2. The more complex approach is *performance* based and is intended to provide flexibility for innovative design and construction by allowing efficiency tradeoffs between various building components. As part of this approach, energy uses of the proposed building and of a standard building in the same climate zone are calculated using a simulation tool. Compliance at the design stage is achieved if the energy use calculated for the proposed building does not exceed the energy use calculated for the standard building. The standard building is physically similar to the proposed building, but is equipped with components that meet the requirements outlined in the prescriptive compliance approach.

Only two software packages are commercially available and certified for performance-based compliance evaluations: Perform95 from the Commission, and EnergyPro from EnergySoft, LLC. Both programs serve as a front-end to DOE-2.1E.

DOE-2.1E is an hour-by-hour energy analysis program that calculates whole-building energy performance and life-cycle economics (Winkelmann et al. 1993). Other simulation programs

could be used to evaluate compliance, but the Commission must certify each one for such use. To be considered for certification, the alternative tool must meet the analysis specifications outlined in the Alternative Calculation Method (ACM) Approval Manual (CEC 2001b) and must be tested to assess modeling accuracy relative to DOE-2.1E Version 110 predictions. Accuracy is assessed using 76 conformance tests that involve several building prototypes, climate zones, and design/system permutations; each test systematically varies one or more features that impact building energy use. Acceptable accuracy means that the performance differences between the proposed and standard buildings calculated using the alternative tool must be within 15% of the differences calculated using DOE-2.1E.

2.2 California Duct Systems

Using survey data collected from 1988 through 1993 by or for California utilities and for the California Energy Commission, Modera et al. (1999) determined that there are three basic types of duct systems in California commercial buildings:

- *Single-duct* systems generate either a cool or warm air stream at the air-handler. The supply air is delivered to the conditioned zones through a single duct system connected to the air-handler. Reheat coils at individual terminal units can be used to add heat to the supply air when needed.
- *Dual duct* systems generate a cool air stream and a warm air stream at the air-handler. Each air stream is supplied to terminal boxes through a separate duct system. The terminal boxes mix the air streams before the supply air enters the zones.
- *Multizone* duct systems also generate a cool air stream and a warm air stream at the air-handler, but they use dampers at the air-handler instead of at a terminal box to mix the cool and warm air streams for each zone. Each zone's supply air is delivered through a separate duct system (this system is somewhat like several single-duct systems operating in parallel).

All of these duct systems use one of two methods to control the amount of energy supplied to each zone. A *constant-air-volume (CAV)* system delivers a fixed quantity of supply air to the conditioned space and maintains desired conditions by varying the temperature of the supply air. A *variable-air-volume (VAV)* system maintains space temperature by varying the quantity of supply air, generally at a fixed temperature.

Based on the floor area served by these duct systems (Modera et al. 1999), the most common system across different building types is the single duct CAV system (71%). The next most common system type is the multizone system (19%). Single-duct VAV systems (8%) and dual duct systems (2%) serve the remainder of the floor area. Note that the fraction of multizone systems might be overrepresented by these data. Modera et al. indicated that the survey data may include some inappropriate affirmative responses for multizone systems. In some cases, the respondent may have called a system that serves more than one zone a multizone system, even though the system is not really a multizone system as described above. For example, some of the multizone systems might actually be single-duct VAV systems that serve multiple zones.

The fractions of floor areas served by CAV and VAV system types are difficult to determine, because the fractions for multizone and dual-duct systems are unknown. However, based on data from Modera et al. (1999) and EIA (2002), the fraction of VAV systems may be in the range of 8 to 34%. The EIA data indicate that VAV systems serve 34% of the large commercial building floor area in the U.S. Pacific region, which includes California.

Although there are substantially fewer VAV systems than CAV systems in California, it is clear that VAV systems are used in a significant fraction of California buildings and need to be addressed when developing duct models for large commercial buildings. A reason to focus on VAV systems is that if one is able to model a VAV system, then a CAV system can also be modeled (it is a simplification of a VAV system). Another reason is that an EPRI study (Pietsch 1991) suggested a significant national trend over the past 30 years towards the use of VAV systems in new construction (e.g., about 75% of new duct systems in the period 1980 through 1990 were VAV systems).

Of the floor area served by single-duct VAV systems, the data from Modera et al. (1999) indicate that most (98%) of it is in large office buildings; the remainder (2%) is primarily in hotel and retail buildings. For this reason, we focused on large office buildings in our study.

2.3 Effects of Duct Deficiencies

In large commercial buildings, duct systems and the effects of deficiencies in these systems are much more complex than in most residential and small-commercial buildings. As an example to illustrate the effects of duct system deficiencies, consider a large commercial building equipped with a single-duct terminal-reheat VAV system that has leaky supply ducts located within a ceiling return air plenum.

When conditioned air leaks from the supply ducts, the heating or cooling energy associated with leakage heats or cools the return air and changes its temperature (and enthalpy). Depending on the temperature difference across each surface that separates the plenum from adjacent conditioned spaces and the outdoors, some of the energy associated with the leakage airflow is transferred from the plenum by conduction across these surfaces. The energy transferred by conduction between the plenum and adjacent zones may be beneficial or detrimental to zone loads. For example, when there is simultaneous heating of perimeter zones and cooling of the core zone, the heating energy associated with leakage from ducts that serve the perimeter zones will tend to increase plenum temperatures; the cooling energy associated with leakage from ducts that serve the core zone will tend to decrease plenum temperatures. A net increase in plenum temperatures will increase the core-zone cooling load and decrease the perimeter-zone heating loads. Conversely, a net decrease in plenum temperatures will decrease the core-zone cooling load and increase the perimeter-zone heating loads.

If the VAV boxes deliberately induce airflows from the ceiling plenum (driven by induction effects or by VAV box fans), the change in return air enthalpy affects the mixed supply air enthalpy within and downstream of the VAV box. This in turn affects the energy that is transferred to the conditioned spaces by these airflows. It can also affect VAV box reheat coil loads (e.g., reduced return air enthalpy due to cool supply air leakage upstream of the VAV box or from other ducts reduces the VAV box mixed air enthalpy and increases reheat coil loads).

A change in return air temperature due to duct leakage will also change cooling coil loads when the economizer is not operating. For example, consider an air-handler with an economizer that is controlled based on dry-bulb temperatures (rather than on enthalpies). When the outdoor air temperature is above the return air temperature high-limit set point, the amount of outdoor air entering the air-handler is the minimum required for ventilation. The remainder of the mixed airflow entering the air-handler (same flow rate as the supply airflow) is return air. Mechanical cooling is used to maintain the desired supply air temperature. In this case, the change in return air enthalpy due to duct leakage will affect the mixed air enthalpy entering the air-handler coils, and therefore will affect the cooling coil loads (e.g., reduced return air enthalpy due to cool supply air leakage reduces mixed air enthalpy and therefore reduces cooling coil loads). To

maintain the desired air pressure differentials across the building envelope, some return air is discharged outdoors. This arrangement means that some of the heating or cooling energy associated with leakage is discharged to outdoors and is not recaptured at the air-handler.

When the outdoor air temperature is between the desired supply air temperature and return air temperature high-limit set point, the economizer operates with 100% outdoor air and no return air enters the air-handler (all of the return air is discharged outdoors). In this case, even though mechanical cooling is used as a supplement to maintain the desired supply air temperature, the change in return air enthalpy due to duct leakage does not affect mixed air enthalpy or cooling coil loads. When the outdoor air temperature is below the desired supply air temperature, there is no mechanical cooling and duct leakage again has no impact on air-handler coil loads. However, to maintain the desired supply air temperature in this case, a change in return air temperature (e.g., due to duct leakage) will cause the economizer to alter the amounts of return air and outdoor air that enter the air-handler.

In the case of a VAV box with leaky downstream ducts, the duct leakage means that insufficient heating or cooling energy is delivered to the conditioned spaces. As a result, the thermostat call for heating or cooling is not satisfied and the thermostat calls for more air to be supplied through the VAV box. To deliver more supply air, the VAV box primary air damper opens further, which in turn reduces the resistance to airflow in the duct system. Consequently, to maintain the main duct static pressure at its set point, the supply fan airflow must increase to compensate for the downstream leakage airflows. Upstream leakage has a similar effect on supply fan airflow, but no effect on VAV box flows (unless the supply fan is too small to maintain duct static pressure in the leaky duct system).

Because the relationship between fan power and airflow is somewhere between a quadratic and cubic function (as described later in Section 2.4.2), the increase in supply airflow to compensate for duct leakage means that supply fan power consumption increases significantly, with a large fraction of this fan power used just to move the leaking air. Increasing the fan power also increases cooling coil loads when mechanical cooling is being used to maintain the desired supply air temperature (when the economizer is operating at 100% or minimum outdoor air). Specifically, the coil load increase occurs because the heat created by the increased fan power tends to increase the supply air temperature downstream of the fan. In response, the cooling coil water valve open furthers to provide more cooling to maintain the desired supply air temperature.

2.4 Duct System Performance Principles

A brief overview of duct air leakage, fan performance, and duct surface heat transfer principles is presented here, with a focus on supply ducts; Parker et al. (1993), Bourdouxhe et al. (1998), and ASHRAE (2001a; 2001b) provide more detailed descriptions. Return ducts are governed by similar principles.

2.4.1 Duct Air Leakage

A power law can be used to describe the relationship between the flow through the leaks in ducts and the static pressure in the duct relative to surrounding space:

$$Q_{leak} = C_1 \cdot \Delta p^{n}_{(duct-space)} \tag{1}$$

Equation 1 indicates that higher system static pressures lead to higher duct air leakage rates for a fixed "hole size" (characterized by the coefficient C_1 and the exponent n). For leaks that look like orifices (e.g., large holes), n is 0.5; for leaks with some length (e.g., lap joints between duct sections), n is larger (on the order of 0.6 or more).

When testing a duct section for leakage by fan pressurization, a measured pressure differential is applied to the test section through a fan that blows air from the surrounding space into the duct. The supplied flow that maintains this pressure differential is determined using a flow meter. By using several data points for Q and Δp, one can solve for C_1 and n using a least squares fit. The effective "hole size" characteristics determined by this pressurization test represent an aggregate of all the leaks in the test section. A common method of reporting the duct leakage uses the leakage class (CL) metric, which expresses the leakage flow in cfm at a reference pressure (1 in. of water, 250 Pa), normalized per 100 ft^2 of duct surface area.

<u>*Duct Leakage in CAV Systems*</u>. In CAV systems, the static pressure in the duct is typically not actively controlled: the static pressure at the fan exit is dependent on system flow resistance and fan performance characteristics.

The static pressures across duct leaks $\Delta p_{(duct\text{-}space)}$ can be related to the static pressure drop through the downstream section of the duct after the fan Δp_{duct}. Assuming a linear pressure drop through the duct, and that the zone supply air exits the diffuser and enters the space at ambient static pressure, the average static pressure in the duct equals about half the static pressure drop through the duct. If turbulent flow is assumed, the airflow rate through the duct Q_{duct} is related to the duct pressure drop according to the square law. This pressure-flow relationship can be expressed as:

$$\Delta p_{(duct-space)} = \frac{\Delta p_{duct}}{2} = C_2 \cdot \left(\frac{Q_{duct}^2}{2} \right) \tag{2}$$

If large holes are assumed in the ducts, then $n = 0.5$ in Equation 1. Assuming that the average duct static pressure corresponds with the average leakage rate, Equation 2 can be substituted into Equation 1 to solve for the average leakage rate as follows:

$$Q_{leak} = C_1 \cdot \Delta p_{(duct-space)}^{0.5} = C_3 \cdot Q_{duct} \tag{3}$$

where

$$C_3 = C_1 \cdot \left(\frac{C_2}{2} \right)^{0.5} \tag{4}$$

In this rough simplification, the fractional leakage ratio C_3 remains fixed regardless of system flow rate and fan pressure. This result assumes that:

- Duct airflow is turbulent,
- Duct pressure varies linearly along the length of the duct,
- Average duct static pressure indicates average leakage rate, and
- Duct leaks are large and have a pressure exponent of 0.5.

While these assumptions are plausible for CAV systems, they are not consistent with the conditions produced in some parts of a VAV system.

<u>*Duct Leakage in VAV Systems*</u>. In contrast to CAV systems, VAV systems maintain a constant static pressure at some point in the duct system upstream of the VAV boxes (except when static pressure reset control strategies are implemented). Consequently, duct air leakage occurring upstream of VAV boxes will have essentially the same flow rate at part-load fan operation as at

design conditions. This means that the leakage fraction in the upstream duct sections is not constant; instead, it varies as the supply flow varies.

The duct static pressure downstream of a VAV box is influenced by the position of the VAV box dampers, as the damper modulates in response to the differential between the room temperature and the thermostat set point. Thus, the duct section downstream of a VAV box behaves much like a CAV system and downstream duct leakage occurs at a fixed fraction of the supply air entering that section.

2.4.2 Fan Performance

Fan electric power is dependent on the fan air power (product of the flow through the fan, and the total pressure rise across the fan), the blade efficiency, and the motor and drive efficiencies. The pressure rise across the fan must be sufficient to overcome the pressure drop in the system. This system pressure drop depends on the pressure drops across duct and duct-like elements (e.g., dampers, fittings), coils, and filters, as well as the static-pressure set point.

Duct and duct-like pressure drops increase as a function of the square of the flow through them. If ducts were the only component in the system, the fan air power would be a cubic function of the flow through the system. However, filters and coils usually follow a power-law functional relationship between pressure drop and flow. For these elements, the pressure drop is proportional to the flow raised to $1/n$:

$$\Delta P_{element} = \frac{Q_{element}^{1/n}}{C_{element}} \tag{5}$$

The value of n for the elements varies from 0.5 to 1. If one of these elements were the only one in the system, the fan power would be a function of the fan flow raised to the power $(1+1/n)$. This bounds the fan air power as somewhere between a square and a cubic function of fan flow.

Knowing the design flows and pressure drops (along with the appropriate n's), it is possible to plot the system pressure drops over a range of flows. If the system resistance varies due to changes in VAV box damper positions, the plot would consist of a family of system curves. Each system curve presents the pressure-drop/flow relationship for a fixed system resistance. When the system performance curves are plotted along with fan performance curves on flow versus pressure plots, the system-fan curve intersections define a locus of unique system operating points.

In many hourly simulation programs, including DOE-2, the fan performance subroutines are based on a third-order polynomial relating fractional fan shaft power to fan flow part load ratio (Brandemuehl et al. 1993). The form of the equation is:

$$FPR = c_0 + c_1 \cdot PLR + c_2 \cdot PLR^2 + c_3 \cdot PLR^3 \tag{6}$$

where

FPR: Fan power ratio, which is the dimensionless ratio of the fan shaft power at a particular time to the fan shaft power under design conditions;

PLR: Part load ratio, which is the dimensionless ratio of the fan flow at the same time to the fan flow under design conditions; and

$c_0 \ldots c_3$: Constant coefficients for the curve fit. The specific coefficients depend on the pressure drop, pressure control, and flow characteristics of the system.

2.4.3 Duct Surface Heat Transfer

Heat transfer across the duct surface is another mechanism for energy transfer to or from the air inside a duct. It involves conduction through the duct wall and insulation, convection at the inner and outer surfaces, and radiation between the duct and its surroundings. For simplicity, the following discussion excludes the radiation component, which involves complex calculations to evaluate view factors between the ducts and surrounding surfaces. The discussion also assumes that startup transients can be ignored, because HVAC systems in large commercial buildings usually do not cycle on and off during their daily operating periods.

The steady-state heat transfer rate across the duct wall can be determined using heat exchanger effectiveness methods (Stoecker 1980, Gu et al. 1998b):

$$q = \varepsilon \cdot C_{\min} \cdot \left(T_{exterior} - T_{interior}\right) \tag{7}$$

where

ε: Heat exchanger effectiveness, which is the dimensionless ratio of the actual heat transfer rate to the maximum possible heat transfer rate;

$C_{\min}$: Heat capacity rate, which is the product of the air mass flow rate inside the duct and the air's specific heat ($c_{p,air}$), W/ºC;

$T_{exterior}$: Temperature of air surrounding duct exterior, ºC; and

$T_{interior}$: Temperature of air entering duct, ºC.

Assuming that the heat capacity rate of the air surrounding the duct exterior is infinite (i.e., the temperature of the air surrounding the duct remains approximately constant along the length of the duct), the heat exchanger effectiveness is an exponential relation that depends only on the overall heat transfer coefficient and $C_{\min}$:

$$\varepsilon = 1 - e^{\left(-UA/C_{\min}\right)} \tag{8}$$

The overall duct heat transfer coefficient (neglecting radiation) in Equation 8 can be determined from the sum of the reciprocals of the resistances associated with the conduction and the convection layers:

$$UA_{duct} = \frac{1}{R_{conv,interior}} + \frac{1}{R_{cond}} + \frac{1}{R_{conv,exterior}} \tag{9}$$

Assuming that turbulent forced convection occurs inside the duct, the convection resistance of the internal flow $R_{conv\ interior}$ in Equation 9 can be calculated as:

$$R_{conv,interior} = \frac{1}{h_{conv,interior} \cdot A_{duct}} \tag{10}$$

$R_{conv\ exterior}$ in Equation 9 can be calculated in a similar manner.

An empirical expression for the convection coefficient in Equation 10 is (ASHRAE 2001a):

$$h_{conv,interior} = 0.023 \cdot \frac{k_{air}}{D_h} \cdot \mathrm{Re}^{0.8} \cdot \mathrm{Pr}^{0.4} \tag{11}$$

where

A_{duct}: Duct surface area, m^2;

k_{air}: Thermal conductivity of air, W/(m·ºC);

D_h: Duct hydraulic diameter, m;

Re: Reynolds number ($\mathrm{Re} = \rho_{air} \cdot V_{duct} \cdot D_h / \mu_{air}$), dimensionless;

Pr: Prandtl number ($\mathrm{Pr} = \mu_{air} \cdot c_{p,air} / k_{air}$), dimensionless;

ρ_{air}: Air density inside duct, kg/m^3;

V_{duct}: Bulk air velocity through duct, m/s; and

μ_{air}: Air viscosity in duct, N·s/m^2.

The conduction resistance of the duct wall R_{cond} is dependent on the duct construction material and thickness, and the insulation R-value, and is calculated as the sum of the duct wall resistance and the insulation resistance.

Outside the duct, combined natural and forced convection can occur. Determining a generally applicable combined convection coefficient is difficult because of the wide variation in duct characteristics and environmental conditions that can be found in the large commercial building stock. Based on conditions in residential attics, which are somewhat like ceiling return air plenums, Walker (1993) has suggested that the coefficient can be determined by the following correlation, which makes the larger of the two coefficients most dominant and maintains a smooth transition from one to the other:

$$h_{conv,exterior} = \left(h^3_{natural,exterior} + h^3_{forced,exterior}\right)^{1/3} \tag{12}$$

The forced convection coefficient in Equation 12 can be expressed by the following empirical correlation that has been linearized over the range of temperatures expected in residential attics:

$$h_{forced,exterior} = \left[18.192 - 0.0378 \cdot \left(\frac{T_{duct,surface} + T_{exterior}}{2}\right)\right] \cdot V^{0.8}_{exterior} \tag{13}$$

and the natural convection coefficient can be expressed by another empirical correlation, which uses the same length scale as the forced convection coefficient:

$$h_{natural,exterior} = 3.2 \cdot \left|T_{duct,surface} - T_{exterior}\right|^{1/3} \tag{14}$$

where

$T_{duct,surface}$: Average temperature of duct exterior surface, ºC; and

$V_{exterior}$: Bulk air velocity across duct exterior, m/s.

By definition, the average temperature of the duct exterior surface can be determined as:

$$T_{duct,surface} = T_{exterior} - \left(\frac{q}{h_{conv,exterior} \cdot A_{duct}}\right) \tag{15}$$

In calculating the duct surface heat transfer, an iterative solution is needed to account for the interdependencies between $T_{duct,surface}$, q, and UA_{duct}.

3. REVIEW OF MODEL IMPLEMENTATIONS

3.1 DOE-2.1E

Given that the current Title 24 compliance procedures are based upon DOE-2.1E (Version 110), it useful to describe the duct thermal performance modeling capabilities and limitations of DOE-2.1E. Xu et al. (1999a) have reviewed these capabilities in detail; the following summarizes and expands upon their findings.

The DOE-2 computer simulation program has five major subprograms that are executed in sequence to simulate mass and energy flows in a building:

1. The BDL Processor subprogram translates user input for use in the other four subprograms.
2. The LOADS subprogram calculates the sensible and latent components of the hourly heating or cooling load for each user-designated space in the building.
3. Using the zone loads calculated by the LOADS subprogram, the SYSTEMS subprogram calculates airflow rates, fan power, and coil loads for airside equipment (fans, coils, and ducts).
4. Using the coil loads calculated by the SYSTEMS subprogram, the PLANT section calculates the energy used by primary equipment, such as boilers, chillers, cooling towers, and storage tanks.
5. Based on the energy use calculated in the SYSTEMS and LOADS subprograms, the ECON subprogram calculates the cost of energy.

At a deeper level within the program structure, there are hundreds of FORTRAN subroutines intertwined together like “spaghetti” (Crawley et al. 1998). This non-modular structure has resulted from various program development efforts by many different people over the past three decades. As a result, making even minor changes or improvements to the program is difficult and expensive. This is a significant problem, given that the capabilities of DOE-2.1E to account for duct leakage and surface heat transfer effects are extremely limited.

In DOE-2.1E, up to and including the last official, federal government-sanctioned version of the program (Version 117), the DUCT-AIR-LOSS program keyword is used to account for air leaking out of supply ducts. With this keyword, the user specifies the constant fraction of the system supply airflow that is lost from the ducts, thereby reducing the amount of supply air that reaches the conditioned zones. Surface heat transfer effects for supply ducts are accounted for by the DUCT-DELTA-T keyword, which simply specifies a constant temperature decrease for hot ducts and a constant temperature increase for cold ducts. Energy associated with supply air duct leakage and supply air temperature changes is not included in the building energy balance; instead, it is assumed that energy is transferred directly between the supply ducts and outdoors, regardless of where the ducts are actually located (Buhl et al. 1981). Effectively, there is no duct model within the reference version of DOE-2.1E; the user must use an external model or engineering judgment to determine values for these keywords.

According to Xu et al. (1999a), later proprietary versions of DOE-2.1E were improved so that the user could specify a supply duct heat loss coefficient instead of simply a supply duct temperature change. The building space that “receives” the supply duct leakage air and that is linked to the surface heat transfer effects could also be specified using a new keyword: PIPE&DUCT-ZONE. Typically, this is a ceiling return plenum (specified by the keyword ZONE-TYPE = PLENUM), but could be an unconditioned space. If the plenum or

unconditioned space is adjacent to conditioned zones, the zone loads must be determined by specifying SIZING-OPTION = ADJUST-LOADS for the conditioned spaces under the ZONE command. In doing so, the adjacent zones will have their load calculations adjusted for changes in the plenum or unconditioned space temperature.

With the newer versions of DOE-2.1E, if the supply and return flows are both ducted, a different modeling strategy is required than the one outlined above. In this case, the space surrounding the ducts should *not* be modeled as a ZONE-TYPE = PLENUM, but should be modeled as a ZONE-TYPE = UNCONDITIONED instead. This allows the user to specify the RETURN-AIR-PATH keyword to be DUCT without its value being overwritten (which occurs when ZONE-TYPE = PLENUM).

In spite of the improvements made recently, significant limitations for modeling duct thermal performance in large commercial buildings remain in DOE-2.1E:

- The supply duct air leakage rate is modeled as a fixed fraction for all system flow rates and types. While this assumption is plausible for some CAV systems, it is not consistent with the conditions that occur in duct sections upstream of terminal boxes in a VAV system. Furthermore, leakage cannot currently be divided into upstream and downstream components relative to the location of terminal boxes, which means the effects of these different types of leakage on terminal box reheat loads and fan power cannot be properly modeled.
- The supply duct heat loss coefficient is constant and does not include radiation effects, or the dependence of convection on airflows and duct interior-exterior air temperature differences. The impact of these assumptions for ducts in large commercial buildings is not clear. However, for ductwork located in an unconditioned rooftop ceiling space, the effect of radiation might be significant (Hirsch 1996). Also, in the duct heat transfer calculation, heat exchanger analysis methods are not used to account for the variation in air temperature along the length of duct (which occurs in real systems); instead, the heat transfer rate is simply based on the average supply-air temperature.
- Duct leakage and surface heat transfer effects are not modeled for return ducts.

3.2 Other Commercially Available Simulation Programs

The U.S. Department of Energy (DOE 2003a) lists 256 software tools for energy-related analyses of buildings. Only a small number of these programs can simulate the whole-building energy use of HVAC systems in large commercial buildings, on an hourly or sub-hourly time scale; even fewer have open source code that is publicly available for review and modification. Other than the two DOE-2.1E Version 110 based programs (EnergyPro and Perform95) identified earlier in this report, none are certified for use in Title 24 compliance analyses.

The following describes three notable programs that can be used now for energy analyses of large commercial buildings, and that have duct thermal performance models beyond the capabilities of DOE-2.1E or that might be adapted to include such models because of their expanded features and other modeling capabilities.

3.2.1 DOE-2.2

In 1993, the Simulation Research Group of Lawrence Berkeley National Laboratory (LBNL) and James J. Hirsch & Associates (JJH) started developing a new version of the DOE-2 building energy simulation program. This new version, to be called DOE-2.2, was intended to replace the current version, DOE-2.1E. Funding the development efforts were the U.S. Department of

Energy (DOE), the Electric Power Research Institute, and others. For various reasons, DOE and LBNL are no longer involved in developing DOE-2.2; however, JJH has continued to develop the program and a proprietary beta version is now available for testing.

Two significant improvements to the duct leakage and surface heat transfer algorithms in the latest versions of DOE-2.1E have been made in DOE-2.2. These include:

- Air leakage from return ducts is now modeled, although surface heat transfer for return ducts is still not modeled.
- The supply duct surface heat transfer algorithm is now based on a heat exchanger model.

Even with these improvements, most of the significant limitations for modeling duct thermal performance in large commercial buildings that were identified in DOE-2.1E remain in DOE 2.2.

3.2.2 EnergyPlus

Since 1996, DOE has been funding LBNL, the University of Illinois, the U.S. Army Construction Engineering Research Laboratory, and others to develop EnergyPlus. This new program is intended to replace both DOE-2 and BLAST (a whole-building energy analysis program sponsored by the Department of Defense). It builds on the strengths of DOE-2 and BLAST by combining the best attributes of both hour-by-hour energy analysis programs into a modular program that can be more easily maintained and upgraded. EnergyPlus includes a number of innovative simulation features (DOE 2003b, 2003c), such as variable time steps (as small as 1 minute) and modular system and plant models that are solved simultaneously with a heat balance-based loads simulation. Within the PIER High Performance Commercial Building Systems program, UC San Diego is completing work on a two-node-zone displacement ventilation model for EnergyPlus to deal with the effects of room air mixing, jets, and buoyancy on space temperature distribution and thermal comfort. All of these features make EnergyPlus attractive for evaluating innovative low-energy cooling building designs.

EnergyPlus has no duct thermal performance models to account for duct leakage or surface heat transfer effects. However, the modular nature of EnergyPlus and a planned link with the SPARK equation-based component simulation tool (Crawley et al. 2001, LBNL 2002) should make model integration relatively straightforward once the models have been defined. The DOE "Guide for Module Developers: Everything You Need to Know about EnergyPlus Calculational Development" (DOE 2003e) provides explicit instructions on how to proceed with module development and integration. The Florida Solar Energy Center is currently integrating a residential duct thermal performance model (Gu et al. 1998b) into EnergyPlus, but it is unlikely that this model will be able to deal with the complex duct systems and operation strategies in large commercial buildings without further development.

A link with COMIS (a multizone airflow network simulation program) is included in EnergyPlus to determine time-varying envelope and interzonal flows. However, at this time, duct flows are either user-specified or are determined solely based on thermal requirements, rather than being determined using COMIS flow and pressure correlations. COMIS (like other similar programs) cannot accurately model duct components involving multi-port flow junctions, because it assumes that duct flows depend on zonal pressure differences, but not directly on flows in other branches (Lorenzetti 2001). In real systems, duct flows (and pressure loss coefficients) in adjacent duct branches can be interdependent.

Assuming that a reliable airflow network solution could be developed to model duct flows in EnergyPlus, there is still the question of appropriate inputs and who would use such models. The location and size distribution of leaks in a duct system are practically unknowable, which means

there may be little point to conducting detailed duct airflow-pressure simulations in other than research investigations. Even if detailed leakage data could be gathered in a real building (likely at great expense), these data would be so voluminous that the burden of entering them might dissuade users from using the model. For compliance evaluations involving hypothetical buildings, large amounts of input data are undesirable for the same reason. Simplifying assumptions could be made about leak location and size distribution (e.g., fixed leakage flows, or fixed fractional leakage flows, as appropriate to various duct sections). Bayesian data analysis methods could also be used to identify key input data (and to develop measurement and performance verification protocols); however, these techniques are only now being developed for use in whole-building airflow simulations (Sohn et al. 2000), and the size and distribution of duct leaks in the large commercial building stock is not yet well defined.

3.3.3 TRNSYS

The TRNSYS simulation program is a transient simulation program that has been in use since 1975, primarily to model building thermal energy systems in research applications (Klein et al. 1996). Because of its modular nature, it allows substantial flexibility for a user to specify a building and its HVAC system component by component. User-specified parameters describe the characteristics of each component, and user-specified interconnections between inputs and outputs link the components. Simulations involve the simultaneous solution of large systems of equations contained in the FORTRAN subroutines that describe the specified component models. Each subroutine defines a component model; user inputs describe to TRNSYS which subroutines should be linked and executed to define the thermal system of interest. This simulation strategy is distinctly different from the sequential solution, predefined system schematic strategy used in programs such as DOE-2.

Many component models are already available in TRNSYS for simulating HVAC system performance in large commercial buildings, and are well documented using the same source code style that is used in the ASHRAE HVAC Secondary Toolkit (Brandemuehl et al. 1993). Franconi (1999) used TRNSYS to model the effects of duct leakage on VAV system performance for a 10-story office building. Problem specific equipment and control models were developed using FORTRAN subroutines from the ASHRAE Toolkit (e.g., a VAV fan, an air-side economizer). New models were also created to represent duct air leakage, VAV boxes with reheat coils, and ceiling return plenums.

The Franconi simulation approach involved a quasi-steady-state strategy with a one-hour time step, and can be described by three sequential steps:

1. Hourly zone loads (heat extraction and addition rates) and zone air temperatures are calculated using DOE-2, for a constant air volume (CAV) system that has no duct leakage. These results are then output to a data file, which is read as input by TRNSYS. The data file also includes the corresponding hourly weather conditions, latent heat gains in conditioned spaces, and heat input to the ceiling plenum from lights.
2. TRNSYS generates hourly HVAC system fan and coil energy consumption data using interconnected detailed component models for the heating and cooling coils, fans, ducts, terminal boxes, economizer, and return plenum. The solution for each hour involves numerous iterations that terminate when convergence is achieved; convergence occurs when the error tolerances associated with component input and output variables are satisfied. Various duct leakage configurations are modeled at this stage. The TRNSYS analysis considers only hours when the HVAC system is operating.

3. Regression analyses based on correlations between DOE-2 system and plant energy use are used to translate the TRNSYS system level coil load data to plant level energy use; energy costs are subsequently calculated based on this energy use.

In this approach, the distribution system simulation is uncoupled from the loads and plant simulations of DOE-2, in the same manner that DOE-2 itself uses. The difference is that the TRNSYS system simulation expands beyond DOE-2 modeling capabilities to offer more flexibility in modeling duct thermal performance issues. A more rigorous approach would involve a coupled simultaneous solution of the loads, system, and plant performance, which could be done now using EnergyPlus if the TRNSYS models were integrated with that program.

Appendix II contains the FORTRAN source code implementations of the seven models that Franconi used in TRNSYS (TYPES: 70, Fan (supply and return); 75, Cooling Coil; 77, Zone Return Air Mixing; 80, Economizer; 81, Ceiling Return Plenum; 82, Upstream Ducts; and 86, VAV Box and Downstream Ducts). For each model, a subroutine and function call mapping is provided to help the reader follow the program logic. Then, the source code begins by defining the purpose of the model, the input and output variables, and the parameters used to characterize component performance. Finally, the source code that follows defines component performance and is essentially self-documenting.

For the most part, the seven models that Franconi used reflect the modeling principles discussed earlier in this report. The exception is that duct surface heat transfer effects are not fully or properly addressed; preliminary efforts to model these effects were included in the subroutine for ducts upstream of VAV boxes (TYPE82), but were never tested or used. Also, it appears that some of the assumptions and duct surface heat transfer equations defined in that subroutine are incorrect (particularly when ducts are insulated) and require further development. Furthermore, the ceiling return plenum model (TYPE81) does not include a storage term to account for the thermal mass of the concrete ceiling of the plenum. Excluding the storage term means that the amplitude of return air temperature variations in the plenum might be larger than actually occurs, especially when the air-handling system is off, and may also be improperly phased as well. The impacts of this omission on duct surface heat transfer rates during system operation are not clear and require further investigation. However, it likely has no significant impact on the most important parameter affected by supply duct air leakage: fan power consumption.

Figure 1 shows a sample of the performance parameters calculated by TRNSYS using the seven models for one hour of VAV system operation during the cooling season, for a case with 10% duct leakage upstream and 10% duct leakage downstream of the VAV boxes (leakage paths shown by dashed lines leading to ceiling plenum). This graphic representation of the TRNSYS output is based on a spreadsheet recently developed by the author as an aid to understand and test the model, and is not generated by TRNSYS itself.

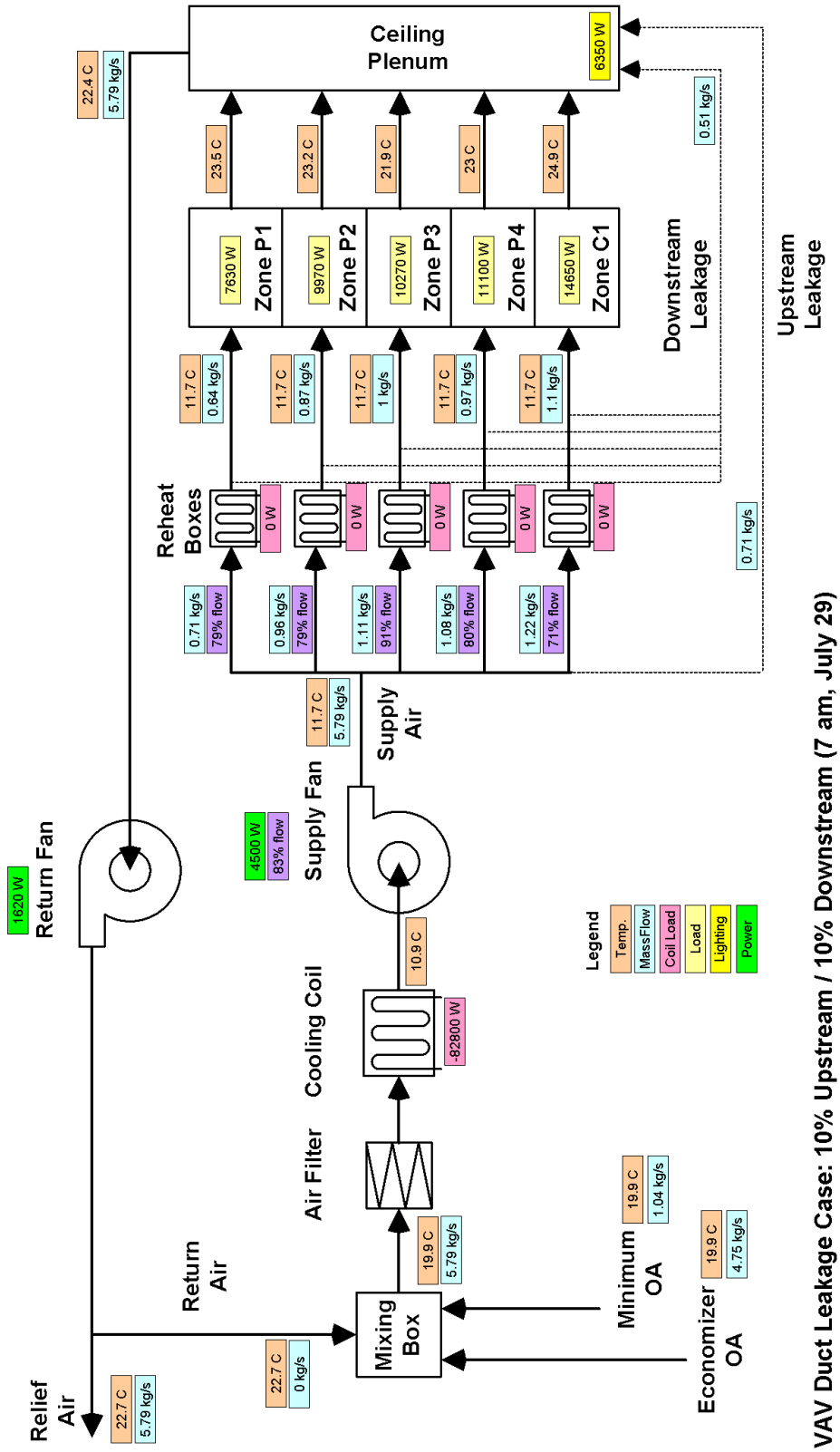

Figure 1. Sample TRNSYS Output

4. PROJECT OUTCOMES

Our duct modeling review involved a literature review of 189 documents related to past HVAC system modeling efforts. We supplemented the review through discussions with building simulation experts to assess new, unpublished, relevant work. Based on this review, we have the following two recommendations for duct modeling approaches: one is for a short-term approach that can be used in the impacts analysis task of this project; the other is for the long-term development of an improved compliance tool for Title 24.

4.1 Recommended Short-Term Modeling Approach

We conclude that the best approach for our impacts analysis task in this project is to build upon the Franconi (1999) research that used DOE-2 and TRNSYS to evaluate HVAC system performance. An advantage of using the DOE-2/TRNSYS approach in this project is that DOE-2 prototypical models for a large commercial California building are already available, as are the custom TRNSYS component models. Another advantage is that the duct leakage modeling approach and its results for a California building have already been validated, and no substantial changes to the simulation tool are required to carry out our analyses. No other whole-building modeling approach to assess duct system performance for large commercial buildings is currently as advanced as this approach.

4.2 Recommended Long-Term Modeling Approach

The choices for incorporating the impacts of duct performance in large commercial buildings into the Title-24, Non-Residential Building Energy Standards include:

1. Using the current DOE-2.1E program,
2. Using an add-on calculation routine along with DOE-2, or
3. Using an alternative calculation method or simulation program.

Initially, it would seem that using the first path might be the most appropriate. The DOE-2.1E program is well entrenched into the Title-24 compliance path, and most importantly, it is used to benchmark alternative compliance models, which means that unless the DOE-2.1E program gets the correct answer, alternative programs that do get the right answer will not be certified. However, as described in this report, there are a number of modeling problems in DOE-2.1E that need to be addressed. Because DOE no longer supports the development of DOE-2, it is likely that modifications would need to be made in the private sector, which could result in proprietary source code that might not be available for public inspection. Furthermore, the convoluted structure of DOE-2 will make modifications difficult and expensive, which is one of the reasons DOE decided to pursue the development of EnergyPlus.

The second path provides a possible alternative. However, the sequential DOE-2 / TRNSYS modeling approach could best be described as “user hostile”. Even though an Excel spreadsheet “interface” has been recently developed to help organize and visualize the input and output of TRNSYS, this simulation approach remains inappropriate outside a research environment. It is unlikely this approach would be practical on a day-to-day basis for compliance analyses.

Assuming that EnergyPlus could be certified as a compliance tool for use in support of the 2008 revisions to Title 24, we suggest that the long-term strategy should involve integrating duct thermal performance models with EnergyPlus. This long-term approach focuses on EnergyPlus rather than on the current compliance version of DOE-2, because we expect that the

recommended enhancements could be more easily applied and used in EnergyPlus for future analyses of innovative low-energy cooling designs. In particular, although EnergyPlus at this time has no capabilities to model duct system thermal losses, we expect that the TRNSYS HVAC system models or ones like them could be incorporated into EnergyPlus directly or through a planned SPARK link to provide a more practical integrated tool for designers.

During the development of EnergyPlus, a link to TRNSYS was planned; such a link would make it easier to add the current TRNSYS models to EnergyPlus. However, it is unlikely that this link will be established, because TRNSYS and EnergyPlus each have separate means to determine simulation time steps, and a way to link these time steps in an external-coupling run-time mode has not been resolved. Essentially, one of the two programs needs to be the "brain" running the simulation and TRNSYS is not setup to give control to EnergyPlus for this functionality. As a result, simply linking the TRNSYS duct thermal performance models to EnergyPlus is not a practical option at this time.

Apart from needing to be certified as an alternative calculation method, a key issue related to using EnergyPlus as a compliance tool is whether users could easily operate the program. At this time, a rudimentary user-interface has been developed for EnergyPlus, but is not yet publicly available. If EnergyPlus is to be used in support of the 2008 Standards, then the development of this interface needs to be accelerated. A related issue is that there is already a well-established user base that knows how to operate DOE-2.1E for compliance analyses. To make it easy for current DOE-2 (and BLAST) users to move to EnergyPlus, utilities are already being developed to convert BLAST and DOE-2 input files for use in EnergyPlus.

4.3 Recommendations for Future Work

Incorporating duct-modeling capabilities into compliance tools is only one aspect of the changes that need to be made to the non-residential standards. Before duct performance in large commercial buildings can be accounted for in Title 24 nonresidential building energy standards, there are several other issues that must be addressed and resolved. These include:

1. Specifying reliable duct air leakage measurement techniques that can be practically applied in the large commercial building sector.
2. Defining the duct leakage condition for the standard building used in Title 24 compliance simulations.
3. Assuring consistency between simulated duct performance impacts and actual impacts.
4. Developing compliance tests for the Alternative Calculation Method (ACM) Approval Manual (CEC 2001b) to evaluate duct performance simulations.

Regarding Issues 1 and 2, new duct air leakage measurement techniques for large commercial buildings are already under development at LBNL. These efforts are focused on developing a rapid technique that measures leakage flows rather than leakage area, and we expect that it could be used to populate a database of duct leakage conditions in the existing building stock.

After the "typical" duct leakage for the building stock is defined, then a decision can be made about what duct leakage level to assign to the standard building. If the standard building description includes a typical duct air leakage rate, then proposed buildings will be rewarded for sealing ducts. If instead the standard building has a reduced leakage level, proposed buildings that are not sealed will be penalized. The decision about what leakage level to assume for the standard building description will depend upon the preparedness of the market to handle required duct efficiency improvements, as opposed to optional improvements.

In terms of prescriptive compliance options, if the standard-building duct performance parameters are established to correspond to typical duct air leakage, determining compliance using the prescriptive approach is straightforward. If the proposed building has a typical duct air leakage level and has ducts insulated to Title 24 requirements, the building complies with respect to ducts. In other words with nothing done to improve duct performance in the building, it would meet the minimal duct performance level in this case. On the other hand, if the standard building has tighter-than-typical duct air leakage specifications, then compliance would require either performance measurements (i.e., duct air leakage measurements), or increased energy efficiency of other building components.

With the standard building defined as having leaky ducts, improving the duct performance in the proposed building affects compliance only if the performance budget approach is used. If leaks are sealed as a compliance conservation measure, standardized testing methods must be adopted to verify reduced leakage rates. Leakage rates determined from the tests would be part of the duct performance input data in the performance compliance analysis for the proposed building.

For Issue 3, one study has already shown through detailed minute-by-minute field measurements in a large commercial building that duct leakage has a significant impact on HVAC system performance (Diamond et al. 2003). The extensive set of HVAC system performance data collected by Diamond et al. could be used to validate simulation tools that are used to predict the duct performance impacts.

Regarding Issue 4, several tests must be performed already on alternative calculation methods before they are approved. Although a test does not yet exist, the proper modeling of duct performance in these alternative methods should be evaluated as part of these capability tests. Given that the current two certified nonresidential compliance tools depend upon DOE-2.1E as the reference evaluation program, and that DOE-2.1E cannot properly account for duct thermal performance, it is expected that results obtained using an alternative calculation method that properly accounts for duct thermal performance might differ substantially from the reference program results. Thus, we recommend that a new reference program be identified for use at least in this test (e.g., EnergyPlus). A prerequisite in this case is that the reference method be appropriately validated against field measurements.

When this project is complete, we expect that it will successfully demonstrate to the building industry that duct leakage in commercial buildings is an important performance issue, and that there is value in reducing thermal losses associated with this leakage. It will also provide the basis for the development of standards that address thermal deficiencies in large commercial duct systems. Three additional steps will be required to further develop duct-modeling capabilities that address limitations in existing models and to initiate strong market activity related to duct system improvements. We recommend that these steps include:

1. Implementing duct models in user-friendly commercially-available software for building energy simulation, validating the implementations with case studies and demonstrations, and obtaining certification for software use as a primary or alternative compliance tool in support of the Title 24 Nonresidential Standards.
2. Developing methodologies to deal with airflows entering VAV boxes from ceiling return plenums (e.g., to model parallel fan-powered VAV boxes), to deal with duct surface heat transfer effects, and to deal with static pressure reset and supply air temperature reset strategies.
3. Transferring information to practitioners through publications, conferences, workshops, and other education programs.

GLOSSARY

ACM	Alternative Calculation Method
ASHRAE	American Society of Heating, Refrigerating, and Air-Conditioning Engineers
CAV	Constant Air Volume
CEC	California Energy Commission
DOE	U.S. Department of Energy
EIA	Energy Information Administration
GWh	Giga Watt hours, 10^9 Wh, 10^6 kWh
HVAC	Heating, Ventilating, and Air Conditioning
JJH	James J. Hirsch & Associates
LBNL	Lawrence Berkeley National Laboratory
MW	Mega Watt, 10^6 W
PIER	Public Interest Energy Research
UC	University of California
VAV	Variable Air Volume

APPENDIX I: BIBLIOGRAPHY

1. Akbari, H., J. Eto, S. Konopacki, and A. Afzal. 1993. "*Integrated Estimation of Commercial Sector End-Use Load Shapes and Energy Use Intensities in PG&E Service Area*". Second Interim Report, Lawrence Berkeley National Laboratory, June 12.

2. ASHRAE. 2001a. "*Handbook of Fundamentals: Chapter 3, Heat Transfer*". Atlanta: American Society of Heating, Refrigeration, and Air-Conditioning Engineers, Inc.

3. ASHRAE. 2001b. "*Handbook of Fundamentals: Chapter 32, Duct Design*." Atlanta: American Society of Heating, Refrigeration, and Air-Conditioning Engineers, Inc.

4. Atkinson, G.V. 1986. "*VAV System Volume Control using Electronic Strategies*". ASHRAE Transactions, V. 92, Pt. 2B. American Society of Heating, Refrigerating and Air-Conditioning Engineers, Inc.

5. Beausoleil-Morrison, I., R. Calla, M. Mottillo, J. Purdy, P. Wyndham-Wheeler, P. Lopez, F. Dubrous, and M. Lubun. 2001. "*Using Building Simulation to Support an Energy-Efficient Incentive Program (CBIP)*". Proceedings of Building Simulation '01, International Building Performance Simulation Association; Rio de Janeiro; August 13-15.

6. Blair, N.J., J.W. Mitchell, and W.A. Beckman. 1995. "*Demonstration of TRNSYS Use in Building Simulations*". Proceedings of Building Simulation '95, International Building Performance Simulation Association; Madison, Wisconsin, August 14-16.

7. Blair, N.J., W.A. Beckman, S.A. Klein, and J.W. Mitchell. 1996. "*TRNSYS for Windows Packages*". Proceedings of Solar '96, The 1996 American Solar Energy Society Annual Conference; Asheville, North Carolina, April 13-l8.

8. Bourdouxhe, J.-P., M. Grodent, and J. Lebrun. 1998. "*Reference Guide for Dynamic Models of HVAC Equipment*". American Society of Heating, Refrigerating and Air-Conditioning Engineers, Inc.

9. Brandemuehl, M.J., S. Gabel, and I. Andresen. 1993. "*HVAC 2 Toolkit: Algorithms and Subroutines for Secondary HVAC System Energy Calculations*". American Society of Heating, Refrigerating and Air-Conditioning Engineers, Inc.

10. Brothers, P.W. and M.L. Warren. 1986. "*Fan Energy Use in Variable Air Volume Systems*". ASHRAE Transactions, V. 92, Pt. 2B. American Society of Heating, Refrigerating and Air-Conditioning Engineers, Inc.

11. Brown, R.E. and J.G. Koomey. 2002. "*Electricity Use in California: Past Trends and Present Usage Patterns*". Lawrence Berkeley National Laboratory Report, LBNL-47992. May.

12. BSO. 1992. "*BLAST: The Building Loads Analysis and System Thermodynamics Program – Volume 2 – Technical Reference Manual*". BLAST Support Office, Department of Mechanical and Industrial Engineering, University of Illinois at Urbana-Champaign.

13. Buhl, W.F., B. Birdsall, A.E. Erdem, R. Curtis, K. Olson, K.L. Ellington, F.C. Winkelmann, and Group Q-11, Los Alamos National Laboratory. 1981. "*DOE-2 Reference Manual, Version 2.1A, Rev. 2*" Lawrence Berkeley National Laboratory, May. LBL-8706.

14. Buhl, W.F., A.E. Erdem, F.C. Winkelmann, and E.F. Sowell. 1993. "*Recent Improvements in SPARK: Strong Component Decomposition, Multivalued Objects, and Graphical Interface*". Proceedings of Building Simulation '93, International Building Performance Simulation Association; Adelaide, Australia; August 16-18.

15. Busch, J. and W. Tschudi. 1999. "*Design Survey and Assessment Of Cleanroom Energy Analysis Tools*". Lawrence Berkeley National Laboratory Draft Report, October.

16. Cappellin, T.E. 1997. "*VAV Systems - What Makes Them Succeed? What Makes Them Fail?*". ASHRAE Transactions, V. 103, Pt. 2. American Society of Heating, Refrigerating and Air-Conditioning Engineers, Inc.

17. Carrié, F.R., J. Andersson, and P. Wouters. 1999. "*Improving Ductwork: A Time for Tighter Air Distribution Systems – A Status Report on Ductwork Airtightness in Various Countries with Recommendations for Future Designs and Regulations*". Air Infiltration and Ventilation Centre, Coventry, UK.

18. CEC. 2001a. "*Nonresidential Manual for Compliance with the 2001 Energy Efficiency Standards (for Nonresidential Buildings, High-Rise Residential Buildings, and Hotels/Motels)*". California Energy Commission, P400-01-023, August.

19. CEC. 2001b. "*Alternative Calculation Method (ACM) Approval Manual for the 2001 Energy Efficiency Standards for Nonresidential Buildings*". California Energy Commission, P400-01-011, April.

20. CEC. 2003. "*List of Approved Computer Programs for the 2001 Energy Efficiency Standards*". California Energy Commission. March 3.

21. Chen, S. and S. Demster. 1996. "*Variable Air Volume Systems for Environmental Quality*". New York: McGraw-Hill.

22. Chen, X., Y. Zhu, and M. Nakahara. 2000. "*Improvement of the Fluid Network's Module Construction for HVACSIM+*". Proceedings of 6th International Conference on Healthy Buildings, International Society of Indoor Air Quality and Climate; Espoo, Finland, August 6-10.

23. Chimack, M.J., C.E. Walker, and E. Franconi. 2001. "*Determining Baseline Energy Consumption and Peak Cooling Loads of a 107-Year-Old Science Museum using DOE 2.1E*". Proceedings of Building Simulation '01, International Building Performance Simulation Association; Rio de Janeiro; August 13-15.

24. Crawley, D.B., L.K. Lawrie, F.C. Winkelmann, C.O. Pedersen, R.J. Liesen, and D.E. Fisher. 1996. "*Workshops on Next-Generation Building Energy Simulation Tools*". IbspaNews, Volume 8, Number 1, International Building Performance Simulation Association. July.

25. Crawley, D.B., L.K. Lawrie, F.C. Winkelmann, W.F. Buhl, A.E. Erdem, C.O. Pedersen, R.J. Liesen, and D.E. Fisher. 1997. "*What Next For Building Energy Simulation - A Glimpse Of The Future*". Proceedings of Building Simulation '97, International Building Performance Simulation Association; Prague, Czech Republic; September 8-10.

26. Crawley, D., Lawrie, L., Pedersen, C., Liesen, R., Fisher, D., Strand, R., Taylor, R., Winkelmann, F., Buhl, F., Huang, J., and Erdem, E. 1998. "*Beyond BLAST and DOE-2: EnergyPlus, A New-Generation Energy Simulation Program*". Proceedings of the ACEEE 1998 Summer Study on Energy Efficiency in Buildings, Efficiency and Sustainability, Asilomar Conference Center, Pacific Grove, CA, August.

27. Crawley, D.B., L.K. Lawrie, C.O. Pedersen, R.J. Liesen, D.E. Fisher, R.K. Strand, R.D. Taylor, F.C. Winkelmann, W.F. Buhl, Y.J. Huang, and A.E. Erdem. 1999. "*EnergyPlus, A New-Generation Building Energy Simulation Program*". Proceedings of the Renewable and Advanced Energy Systems for the 21st Century, American Society of Mechanical Engineers; Lahaina, Maui, Hawaii, April 11-15. RAES99-7601.

28. Crawley, D.B., L.K. Lawrie, C.O. Pedersen, and F.C. Winkelmann. 2000. "*EnergyPlus: Energy Simulation Program*". ASHRAE Journal, Vol. 42, April. LBNL-46002.

29. Crawley, D., L.K. Lawrie, F.C. Winkelmann, W.F. Buhl, Y.J. Huang, C.O. Pedersen, R.K. Strand, R.J. Liesen, D.E. Fisher, M.J. Witte, and J. Glazer. 2001a. "*EnergyPlus: Creating a New-Generation Building Energy Simulation Program*". Energy and Buildings, Volume 33, Issue 4, April.

30. Crawley, D.B., L.K. Lawrie, F.C. Winkelmann, and C.O. Pedersen. 2001b. "*EnergyPlus: New Capabilities in a Whole-Building Energy Simulation Program*". Proceedings of Building Simulation '01, International Building Performance Simulation Association; Rio de Janeiro; August 13-15.

31. Crawley, D.B., L.K. Lawrie, C.O. Pedersen, F.C. Winkelmann, M.J. Witte, R.K. Strand, R.J. Liesen, W.F. Buhl, Y.J. Huang, R.H. Henninger, J. Glazer, D.E. Fisher, and D. Shirey. 2002. "*EnergyPlus: New, Capable and Linked*". Green Building International Conference and Expo, U.S. Green Building Council; Austin, Texas, November 13-15.

32. deWit, S. and G. Augenbroe. 2001. "*Uncertainty Analysis of Building Design Evaluations*". Proceedings of Building Simulation '01, International Building Performance Simulation Association; Rio de Janeiro; August 13-15.

33. Diamond, R., C. Wray, D. Dickerhoff, N. Matson, and D. Wang. 2003. "*Thermal Distribution Systems in Commercial Buildings*". Lawrence Berkeley National Laboratory Report, LBNL-51860.

34. DOE. 2003a. "*Building Energy Software Tools Directory*". U.S. Department of Energy, Office of Building Technology, State and Community Programs. http://www.eere.energy.gov/buildings/tools_directory/.

35. DOE. 2003b. "*EnergyPlus Engineering Document: The Reference to EnergyPlus Calculations*". Board of Trustees of the University of Illinois and Regents of the University of California through the Ernest Orlando Lawrence Berkeley National Laboratory, U.S. Department of Energy. April 7.

36. DOE. 2003c. "*Input Output Reference: The Encyclopedic Reference to EnergyPlus Input and Output*". Board of Trustees of the University of Illinois and Regents of the University of California through the Ernest Orlando Lawrence Berkeley National Laboratory, U.S. Department of Energy. April 14.

37. DOE. 2003d. "*Guide for Interface Developers: Everything You Need to Know about EnergyPlus Input and Output*". Board of Trustees of the University of Illinois and Regents of the University of California through the Ernest Orlando Lawrence Berkeley National Laboratory, U.S. Department of Energy. April 13.

38. DOE. 2003e. "*Guide for Module Developers: Everything You Need to Know about EnergyPlus Calculational Development*". Board of Trustees of the University of Illinois and Regents of the University of California through the Ernest Orlando Lawrence Berkeley National Laboratory, U.S. Department of Energy. April 13.

39. DOE. 2003f. "*Output Details and Examples: An In-Depth Guide to EnergyPlus Outputs, Example Inputs and Data Set Files*". Board of Trustees of the University of Illinois and Regents of the University of California through the Ernest Orlando Lawrence Berkeley National Laboratory, U.S. Department of Energy. April 13.

40. Donn, M., J. Lee, N. Isaacs, and P. Bannister. 1995. "*Decision Support Tools for Building Code Energy Efficiency Compliance*". Proceedings of Building Simulation '95, International Building Performance Simulation Association; Madison, Wisconsin, August 14-16.

41. Dorer, V., A. Haas, W. Keilholz, R. Pelletret, and A. Weber. 2001. "*COMIS V3.1 Simulation Environment for Multizone Air Flow and Pollutant Transport Modelling*". Proceedings of Building Simulation '01, International Building Performance Simulation Association; Rio de Janeiro; August 13-15.

42. EIA. 2002. "*1999 Commercial Buildings Energy Consumption Survey - Detailed Tables*". Energy Information Administration, U.S. Department of Energy. August. http://www.eia.doe.gov/emeu/cbecs/pdf/alltables.pdf

43. Eilert, P. 2000. "*Air Distribution Systems: Codes and Standards Enhancement (CASE) Study*". Pacific Gas and Electric Company Report, November 28.

44. Eley, C. 2001. "*Measure Identification and Analysis Plan - 2005 California Building Energy Efficiency Standards - Envelope: T-Bar Ceilings*". Draft Report of Eley Associates to the California Energy Commission, Contract Number 400-00-061. November 8.

45. Eriksson, J.B. 1999. "*A Method For Analysis of Controllability of Duct Systems Designed For Variable Ventilation Flow Rates*". Proceedings of Building Simulation '99, International Building Performance Simulation Association; Kyoto, Japan, September 13-15.Emmerich, S.J., A.K. Persily, and D.A. VanBronkhorst. 1995. "*A Workplan to Analyze the Energy Impacts of Envelope Airtightness in Office Buildings*". Report of Building and Fire Research Laboratory, National Institute of Standards and Technology, NISTIR 5758. December.Englander, S.L. and L.K. Norford. 1992. "*Saving Fan Energy in VAV Systems – Part 1: Analysis of a Variable-Speed-Drive Retrofit*". ASHRAE Transactions, V. 98, Pt. 1. American Society of Heating, Refrigerating and Air-Conditioning Engineers, Inc.

48. Englander, S.L. and L.K. Norford. 1992. "*Saving Fan Energy in VAV Systems – Part 2: Supply Fan Control for Static Pressure Minimization using DDC Feedback*". ASHRAE Transactions, V. 98, Pt. 1. American Society of Heating, Refrigerating and Air-Conditioning Engineers, Inc.

49. Eriksson, J.B. 1999. "*A Method to Study Air Distribution Control*". Master's Thesis, Royal Institute of Technology, Stockholm, Sweden. Swedish Council for Building Research, Bulletin no. 49. ISRN KTH/IT/M-49-SE. August.

50. Fisher, D.E., R.D. Taylor, F. Buhl, R.J. Leisen, and R.K. Strand. 1999. "*A Modular, Loop-Based Approach To HVAC Energy Simulation And Its Implementation In EnergyPlus*". Proceedings of Building Simulation '99, International Building Performance Simulation Association; Kyoto, Japan, September 13-15.

51. Fisher, D.E. and C.O. Pedersen. 1998. "*Convective Heat Transfer in Building Energy and Thermal Load Calculations*". Report of BLAST Support Office, University of Illinois at Urbana-Champaign.

52. Fisk, W.J., W. Delp, R. Diamond, D. Dickerhoff, R. Levinson, M. Modera, M. Nematollahi, and D. Wang. 2000. "*Duct Systems in Large Commercial Buildings: Physical Characterization, Air Leakage, and Heat Conduction Gains*". Energy and Buildings, Vol. 32, No. 1. LBNL-42339.

53. Franconi, E. and Y.J. Huang. 1996. "*Shell, System, and Plant Contributions to the Space Conditioning Energy Use of Commercial Buildings*". Proceedings of the ACEEE 1996 Summer Study on Energy Efficiency in Buildings, Efficiency and Sustainability, Asilomar Conference Center, Pacific Grove, CA, August 25-31.

54. Franconi, E. 1998. "*Measuring Advances in HVAC Distribution System Design*". Proceedings of the ACEEE 1998 Summer Study on Energy Efficiency in Buildings, Efficiency and Sustainability, Asilomar Conference Center, Pacific Grove, CA, August 23-28. LBNL-43188.

55. Franconi, E., W. Delp, and M. Modera. 1998. "*Impact of Duct Air-Leakage on VAV System Energy Use*". Lawrence Berkeley National Laboratory Draft Report. LBNL-42417.

56. Franconi, E.M. 1999. "*Thermodynamic Analysis for Improved HVAC Distribution System Performance*". Ph.D. Dissertation, Department of Civil, Environmental, and Architectural Engineering, University of Colorado, Boulder.

57. Gu, L., J.E. Cummings, M.V. Swami, and P.W. Fairey. 1998a. "*Comparison of Duct Computer Models that Could Provide Input to the Proposed Thermal Distribution Standard Method of Test*". ASHRAE Transactions, V. 104, Pt. 1. American Society of Heating, Refrigerating and Air-Conditioning Engineers, Inc.

58. Gu, L., M.V. Swami, J.E. Cummings, P.W. Fairey, T.W. Petrie, and J.E. Christian. 1998b. "*Comparison of a Duct System Computer Model with Measured Data in a Residential Attic with a Duct System*". ASHRAE Transactions, V. 104, Pt. 2. American Society of Heating, Refrigerating and Air-Conditioning Engineers, Inc.

59. Hackner, R.J., J.W. Mitchell, and W.A. Beckman. 1984. "*HVAC System Dynamics and Energy Use in Existing Buildings – Part I*". ASHRAE Transactions, V. 90, Pt. 2B. American Society of Heating, Refrigerating and Air-Conditioning Engineers, Inc.

60. Haltrecht, D., R. Zmeureanu, and I. Beausoleil-Morrison. 1999. "*Defining The Methodology For The Next - Generation HOT2000™ Simulator*". Proceedings of Building Simulation '99, International Building Performance Simulation Association; Kyoto, Japan, September 13-15.

61. Hand, J. and L. McElroy. 2002. "*Simulation, No Problem, Of Course We Offer This Service! (Observations on Firms Who Have Worked to Make This True)*". Proceedings of eSim 2002, International Building Performance Simulation Association –Canada; Montréal, Québec, Canada, September 11-13.

62. Haves, P. 1995. "*Detailed Modelling And Simulation Of A VAV Air-Conditioning System*". Proceedings of Building Simulation '95, International Building Performance Simulation Association; Madison, Wisconsin, August 14-16.

63. Haves, P. 1997. "*Fault Modelling in Component-Based HVAC Simulation*". Proceedings of Building Simulation '97, International Building Performance Simulation Association; Prague, Czech Republic; September 8-10.

64. Haves, P., L.K. Norford, and M. DeSimone. 1998. "*A Standard Simulation Test Bed for the Evaluation of Control Algorithms and Strategies*". ASHRAE Transactions, V. 104, Pt. 1. American Society of Heating, Refrigerating and Air-Conditioning Engineers, Inc.

65. Haves, P. and S.K. Khalsa. 2000. "*Model-Based Performance Monitoring: Review of Diagnostic Methods and Chiller Case Study*". Proceedings of the ACEEE 2000 Summer Study on Energy Efficiency in Buildings, Efficiency and Sustainability, Asilomar Conference Center, Pacific Grove, CA, August 20-25. LBNL-45949.

66. Haves, P., T. Salsbury, D. Claridge, and M. Liu. 2001. "*Use of Whole-Building Simulation in On-Line Performance Assessment: Modeling and Implementation Issues*". Proceedings of Building Simulation '01, International Building Performance Simulation Association; Rio de Janeiro; August 13-15.

67. Hedrick, R. 2001. "*Integrated Energy Systems Productivity and Building Science Program: Literature Search on Enclosing Ducts in Conditioned Space, Task 6.3.1a*". GARD Analytics Report to New Buildings Institute, Inc. August 10.

68. Hedrick, R. 2001. "*Integrated Energy Systems Productivity & Building Science Program: Element 6 – Integrated Design of Residential Ducting & Air Flow Systems*". GARD Analytics and New Buildings Institute, Inc. Annual Report, Volume 6 of 7. August 16.

69. Henninger, R.H. and M.J. Witte. 2002. "*EnergyPlus Testing with ANSI/ASHRAE Standard 140-2001 (BESTEST), EnergyPlus Version 1.0.3.019*". Report of GARD Analytics, Park Ridge, Illinois, December.

70. Henninger, R.H. and M.J. Witte. 2002. "*EnergyPlus Testing with HVAC BESTEST, Part 1 - Tests E100 to E200, EnergyPlus Version 1.0.3.019*". Report of GARD Analytics, Park Ridge, Illinois, December.

71. Hensen, J. 1995. "*On System Simulation For Building Performance Evaluation*". Proceedings of Building Simulation '95, International Building Performance Simulation Association; Madison, Wisconsin, August 14-16.

72. Hensen, J. and A. Yahiaoui. 2002. "*Towards Run-Time Coupling of Building Performance Simulation Programs*". Center for Building & Systems TNO-TU/e, Technische Universiteit Eindhoven, Netherlands. October.

73. Hiller, M., S. Holst, A. Knirsch, and M. Schuler. 2001. "*TRNSYS 15 – A Simulation Tool for Innovative Concepts*". Proceedings of Building Simulation '01, International Building Performance Simulation Association; Rio de Janeiro; August 13-15.

74. Hirsch, J. 1996. "*DOE-2.1E-110 Enhancements*". Application notes for the DOE 2.1E program version 110, September.

75. Hirsch, J.J., S.D. Gates, S.A. Criswell, M.S. Addison, F.C. Winkelmann, W.F. Buhl, and K.L. Ellington. 1998. "*DOE-2.2 and PowerDOE: The New Generation in DOE-2 Building Energy Analysis*". James. J. Hirsch and Associates and Lawrence Berkeley National Laboratory.

76. Huang, Y.J., J.W. Hanford, and M. Piraino. 1993. "*The Impact of Variations in Building Parameters and Operating Conditions on Commercial Building Energy Use and Load Shapes*". Proceedings of Building Simulation '93, International Building Performance Simulation Association; Adelaide, Australia; August 16-18.

77. Huang, J. and E. Franconi. 1999. "*Commercial Heating and Cooling Loads Component Analysis*". Lawrence Berkeley National Laboratory Report, LBL-37208.

78. Huang, J., F. Winkelmann, F. Buhl, C. Pedersen, D. Fisher, R. Liesen, R. Taylor, R. Strand, D. Crawley, and L. Lawrie. 1999. "*Linking The COMIS Multi-Zone Airflow Model With The EnergyPlus Building Energy Simulation Program*". Proceedings of Building Simulation '99, International Building Performance Simulation Association; Kyoto, Japan, September 13-15.

79. Huang, Y.J. and J. Brodrick. 2000. "*A Bottom-Up Engineering Estimate of the Aggregate Heating and Cooling Loads of the Entire US Building Stock*". Proceedings of the ACEEE 2000 Summer Study on Energy Efficiency in Buildings, Efficiency and Sustainability, Asilomar Conference Center, Pacific Grove, CA, August 20-25. LBNL-46303.

80. Hunn, B.D. (Editor). 1996. "*Fundamentals of Building Energy Dynamics*". Cambridge, Massachusetts: The MIT Press.

81. IEA. 1999. "*Models for Building Indoor Climate and Energy Simulation: A Report of Task 22, Building Energy Analysis Tools*". International Energy Agency, Solar Heating and Cooling Programme. December.

82. IEA. 2001. "*Empirical Validation of Iowa Energy Resource Station Building Energy Analysis Simulation Models: A Report of Task 22, Subtask A Building Energy Analysis Tools, Project A.1 Empirical Validation*". International Energy Agency, Solar Heating and Cooling Programme. Edited by: J. Travesi, CIEMAT; G. Maxwell, Iowa State University; C. Klaassen, Iowa Energy Resource Station, and M. Holtz, Architectural Energy Corporation. June.

83. Jacobs P., T. Conlon, H. Henderson, M. Brandemuehl, and K. Rice. 2001. "*State-of-the-Art Review of Building Simulation and Design Tools, Part 1: Whole-Building and Building Envelope Simulation Design Tools; Part 2: HVAC Component and System Simulation and Design Tools*". TC 4.7 Seminar: A Review of State-of-the-Art in Building Simulation, ASHRAE Annual Meeting, Cincinnati, Ohio, June.

84. Jacobs, P. 2001. "*Integrated Energy Systems Productivity & Building Science Program: Element 4 – Integrated Design of Small Commercial HVAC Systems*". Architectural Energy Corp. and New Buildings Institute, Inc. Annual Report, Volume 4 of 7. August 15.

85. Jacobs, P. 2001. "*Integrated Energy Systems Productivity and Building Science Program: Background Research Summary, Task 4.3.1*". Architectural Energy Corporation Draft Report to New Buildings Institute, Inc. August 15.

86. Jacobs, P. 2001. "*Integrated Energy Systems Productivity and Building Science Program: System Integration Research Issues, Task 4.3.2*". Architectural Energy Corporation Report to New Buildings Institute, Inc. December 7.

87. Jansky, R. and M. Modera. 1995. "*Sensitivity Analysis of Residential Duct System Efficiency in California*". Lawrence Berkeley National Laboratory Draft Report, LBL-34674. May 12.

88. Johnson, G.A. 1985. "*From Constant Air to Variable: Alternative Airflow Control Techniques and Variable Speed Drive Help Convert Single-Zone Constant Volume to Single-Zone Variable Air Volume System*". ASHRAE Journal, Vol. 27. American Society of Heating, Refrigerating and Air-Conditioning Engineers, Inc. January.

89. Kim, T., J.D. Spitler, and R.D. Delahousssaye. 2002. "*Optimum Duct Design for Variable Air Volume Systems, Part 1: Problem Domain Analysis of VAV Duct Systems*". ASHRAE Transactions, V. 108, Pt. 1. American Society of Heating, Refrigerating and Air-Conditioning Engineers, Inc.

90. Kim, T., J.D. Spitler, and R.D. Delahousssaye. 2002. "*Optimum Duct Design for Variable Air Volume Systems, Part 2: Optimization of VAV Duct Systems*". ASHRAE Transactions, V. 108, Pt. 1. American Society of Heating, Refrigerating and Air-Conditioning Engineers, Inc.

91. Klein, S.A., W.A. Beckman, J.W. Mitchell, J.A. Duffie, N.A. Duffie, T.L. Freman, J.C. Mitchell, J.E. Braun, B.L. Evans, J.P. Kummer, R.E. Urban, A. Fiskel, and J.W. Thornton. 1996. "*TRNSYS: A Transient System Simulation Program*". Solar Energy Laboratory, University of Wisconsin-Madison. Version 14.2.

92. Knebel, D.E. 1983. "*Simplified Energy Analysis using the Modified Bin Method*". American Society of Heating, Refrigerating and Air-Conditioning Engineers, Inc.

93. Kolderup, E. 2001. "*Integrated Energy Systems Productivity and Building Science Program: Onsite Inspection Summary Report, Task 3.2.4*". Eley & Associates Report to New Buildings Institute, Inc. August 10.

94. Kolderup, E. 2001. "*Integrated Energy Systems Productivity & Building Science Program: Element 3 – Integrated Design of Large Commercial HVAC Systems*". Eley Associates, Inc. and New Buildings Institute, Inc. Annual Report, Volume 3 of 7. August 16.

95. Kreider, J.F. and A. Rabl. 1994. "*Heating and Cooling of Buildings: Design for Efficiency*". New York: McGraw-Hill.

96. Kukla, M.D. 1997. "*Situations to Consider When Variable Air Volume Is an Option*". ASHRAE Transactions, V. 103, Pt. 2. American Society of Heating, Refrigerating and Air-Conditioning Engineers, Inc.

97. Kusuda, T. 1981. "*A Comparison of Energy Calculation Procedures*". ASHRAE Journal, Vol. 23. American Society of Heating, Refrigerating and Air-Conditioning Engineers, Inc. August.

98. Kusuda, T. 1999. "*Early History and Future Prospects of Building System Simulation*". Proceedings of Building Simulation '99, International Building Performance Simulation Association; Kyoto, Japan, September 13-15.

99. LBNL. 1998. "*Overview of DOE-2.2*". Simulation Research Group, Lawrence Berkeley National Laboratory, University of California, and James J. Hirsch and Associates. June.

100. LBNL. 2002. "*SPARK 1.0.2 Reference Manual: Simulation Problem Analysis and Research Kernel*". Lawrence Berkeley National Laboratory and Ayres Sowell Associates, Inc.

101. Liesen, R.J. and C.O. Pedersen. 1997. "*An Evaluation of Inside Surface Heat Balance Models for Cooling Load Calculations*". ASHRAE Transactions, V. 103, Pt. 2. American Society of Heating, Refrigerating and Air-Conditioning Engineers, Inc.

102. Liesen, R.J. 1997. "*Atmospheric Pollution Prediction in a Building Energy Simulation Program*". Report of BLAST Support Office, University of Illinois at Urbana-Champaign.

103. Liesen, R.J. and C.O. Pedersen. 1999. "*Modeling the Energy Effects of Combined Heat and Mass Transfer in Building Elements; Part 1 – Theory*". ASHRAE Transactions, V. 105, Pt. 2. American Society of Heating, Refrigerating and Air-Conditioning Engineers, Inc.

104. Liesen, R.J. and C.O. Pedersen. 1999. "*Modeling the Energy Effects of Combined Heat and Mass Transfer in Building Elements; Part 2 – Application to a Building Energy Analysis Program and Examples*". ASHRAE Transactions, V. 105, Pt. 2. American Society of Heating, Refrigerating and Air-Conditioning Engineers, Inc.

105. Liesen, R.J., R.K. Strand, and C.O. Pedersen. 1998. "*The Effect of Varying the Radiative/Convective Split for Internal Loads on Cooling Load Calculations: A Case Study for the Pentagon*". Report of BLAST Support Office, University of Illinois at Urbana-Champaign.

106. Linder, R. and C.B. Dorgan. 1997. "*VAV Systems Work Despite Some Design and Application Problems*". ASHRAE Transactions, V. 103, Pt. 2. American Society of Heating, Refrigerating and Air-Conditioning Engineers, Inc.

107. Lorenzetti, D.M. and L.K. Norford. 1992. "*Measured Energy Consumption of Variable-Air-Volume Fans Under Inlet Vane and Variable-Speed-Drive Control*". ASHRAE Transactions, V. 98, Pt. 2. American Society of Heating, Refrigerating and Air-Conditioning Engineers, Inc.

108. Lorenzetti, D.M. 2001. "*Assessing Multizone Airflow Software*". Lawrence Berkeley National Laboratory Report, LBNL-47653. December.

109. Lorsch, H.G. 1993. "*Air-Conditioning Systems Design Manual*". American Society of Heating, Refrigerating and Air-Conditioning Engineers, Inc.

110. Lunneberg, T.A. 1999. "*Improving Simulation Accuracy Through The Use Of Short-Term Electrical End-Use Monitoring*". Proceedings of Building Simulation '99, International Building Performance Simulation Association; Kyoto, Japan, September 13-15.

111. MacDonald, A.I., J.A. Clarke, and P.A. Strachan. 1999. "*Assessing Uncertainty In Building Simulation*". Proceedings of Building Simulation '99, International Building Performance Simulation Association; Kyoto, Japan, September 13-15.

112. Mahone, D. 2001. "*Duct Tightening - California Building Energy Efficiency Standards, Revisions for July 2003 Adoption*". Report of Pacific Gas & Electric Co and Heschong Mahone Group to the California Energy Commission. November 5.

113. Maki, K.S., G.A. Chamberlin, Z. Li, and L.L. Christianson. 1997. "*VAV System Performance - Field Characterization of Airflow, System Diagnosis Tools, and Operational Design Implications*". ASHRAE Transactions, V. 103, Pt. 2. American Society of Heating, Refrigerating and Air-Conditioning Engineers, Inc.

114. Maloney, D. 1985. "*A Verification of the Use of Heat Conduction Transfer Functions as Used in the Program BLAST*". Student Project Report, BLAST Support Office, University of Illinois at Urbana-Champaign.

115. McClellan, T.M. and C.O. Pedersen. 1997. "*Investigation of Outside Heat Balance Models for Use in a Heat Balance Cooling Load Calculation Procedure*". ASHRAE Transactions, V. 103, Pt. 2. American Society of Heating, Refrigerating and Air-Conditioning Engineers, Inc.

116. McConahey, E., P. Haves, and T. Christ. 2002. "*The Integration of Engineering and Architecture: A Perspective on Natural Ventilation for the New San Francisco Federal Building*". Proceedings of the ACEEE 2002 Summer Study on Energy Efficiency in Buildings, Efficiency and Sustainability, Asilomar Conference Center, Pacific Grove, CA, August 18-23. LBNL-51134.

117. McQuiston, F.C. and J.D. Parker. 1982. "*Heating, Ventilating, and Air Conditioning: Analysis and Design*". New York: John Wiley and Sons. 2nd Edition.

118. Metcalf, R. R., R. D. Taylor, C. O. Pedersen, R. J. Liesen, and D. E. Fisher. 1995. "*Incorporating A Modular System Simulation Program Into A Large Energy Analysis Program: The Linking Of IBLAST And HVACSIM+*". Proceedings of Building Simulation '95, International Building Performance Simulation Association; Madison, Wisconsin, August 14-16.

119. Metcalf, R.R. 1994. "*Development of a Generalized Fan System Simulation for the Building Loads Analysis and System Thermodynamics Program (BLAST)*". Master's Thesis, University of Illinois at Urbana-Champaign.

120. Modera, M.P. and R. Jansky. 1992. "*Residential Air-Distribution Systems: Interactions with the Building Envelope*". ASHRAE-DOE-BTEC Conference: Thermal Performance of the Exterior Envelopes of Buildings V; Clearwater, FL, December 7-10. LBL-31311.

121. Modera, M.P. and B. Treidler. 1995. "*Improved Modelling of HVAC System/Envelope Interactions in Residential Buildings*". Proceedings of the ASME International Solar Energy Conference; Maui, Hawaii. March 19-24. LBL-36048.

122. Modera, M. T. Xu, H. Feustel, N. Matson, C. Huizenga, F. Bauman, E. Arens, and T. Borgers. 1999. "*Efficient Thermal Energy Distribution in Commercial Buildings*". Lawrence Berkeley National Laboratory Report to California Institute for Energy Efficiency, LBNL-41365. August.

123. Modera, M.P. 2002. "*Proposed Revisions to 2005 Title 24 Energy Efficiency Standards: Addition of HVAC Transport Efficiency Concept*". Memorandum to the California Energy Commission. October 31.

124. Mombourquette, S. 2002. "*Building Simulation Software: Improving Development Procedures*". Proceedings of eSim 2002, International Building Performance Simulation Association –Canada; Montréal, Québec, Canada, September 11-13.

125. Mutammara, A.W. and D.C. Hittle. 1990. "*Energy Effects of Various Control Strategies for Variable-Air-Volume Systems*". ASHRAE Transactions, V. 96, Pt. 1. American Society of Heating, Refrigerating and Air-Conditioning Engineers, Inc.

126. Neymark, J., R. Judkoff, G. Knabe, H. T. Le, M. Durig, A. Glass, and G. Zweifel. 2001. "*HVAC BESTEST: A Procedure for Testing the Ability of Whole-Building Energy Simulation Programs to Model Space Conditioning Equipment*". Proceedings of Building Simulation '01, International Building Performance Simulation Association; Rio de Janeiro; August 13-15.

127. Neymark, J. and R. Judkoff. 2002. "*International Energy Agency Building Energy Simulation Test and Diagnostic Method for Heating, Ventilating, and Air-Conditioning Equipment Models (HVAC BESTEST), Volume 1: Cases E100–E200*". National Renewable Energy Laboratory Report, NREL/TP-550-30152. January.

128. Nishi, Y., X. Chen, and N. Nakahara. 1999. "*Development of a Visual Tool for Dynamic Simulation Program HVACSIM+*". Proceedings of Building Simulation '99, International Building Performance Simulation Association; Kyoto, Japan, September 13-15.

129. Nishitani, Y., M. Zheng, H. Niwa, and N. Nakahara. 1999. "*A Comparative Study of HVAC Dynamic Behavior Between Actual Measurements and Simulated Results by HVACSIM+(J)*". Proceedings of Building Simulation '99, International Building Performance Simulation Association; Kyoto, Japan, September 13-15.

130. Norford, L.K., A. Rabl, and R.H. Socolow. 1986. "*Control of Supply Air Temperature and Outdoor Airflow and Its Effect on Energy Use in a Variable Air Volume System*". ASHRAE Transactions, V. 92, Pt. 2B. American Society of Heating, Refrigerating and Air-Conditioning Engineers, Inc.

131. NRCan. 1997. "*Defining the Methodology for the Next-Generation HOT2000 Simulator: Loads Workshop Summary*". Natural Resources Canada, Ottawa. July 18.

132. NRCan. 1997. "*Defining the Methodology for the Next-Generation HOT2000 Simulator: HVAC Workshop Summary*". Natural Resources Canada, Ottawa. December 11.

133. NTIS. 2001. "*DOE-2.1E Basics Manual*". National Technical Information Service, Springfield, VA. NTIS Order Number DE-940-13165. August.

134. Parker, D., P. Fairey, and L. Gu. 1993, "*Simulation of the Effects of Duct Leakage and Heat Transfer on Residential Space-Cooling Energy Use*". Energy and Buildings, Vol. 20.

135. Parker, D.S., P.A. Broman, J.B. Grant, L. Gu, M.T. Anello, R.K. Vieira, and H.I. Henderson. 1999. "*ENERGYGAUGE USA: A Residential Building Energy Simulation Design Tool*". Proceedings of Building Simulation '99, International Building Performance Simulation Association; Kyoto, Japan, September 13-15.

136. Pedersen, C.O., D.E. Fisher, and R.J. Liesen. 1997. "*Development of a Heat Balance Procedure for Calculating Cooling Loads*". ASHRAE Transactions, V. 103, Pt. 2. American Society of Heating, Refrigerating and Air-Conditioning Engineers, Inc.

137. Pedersen, C. O., D. E. Fisher, R. J. Liesen, R. K. Strand, and R. D. Taylor. 1997. "*Energybase: The Merger Of Blast And Doe-2*". Proceedings of Building Simulation '97, International Building Performance Simulation Association; Prague, Czech Republic; September 8-10.

138. Pedersen, C.O., D.E. Fisher, J.D. Spitler, and R.J. Liesen. 1998. "*Cooling and Heating Load Calculation Principles*". American Society of Heating, Refrigerating and Air-Conditioning Engineers, Inc.

139. Pelletret, R.Y. and W.P. Keilholz. 1997. "*COMIS 3.0 A New Simulation Environment For Multizone Air Flow and Pollutant Transport Modelling*". Proceedings of Building Simulation '97, International Building Performance Simulation Association; Prague, Czech Republic; September 8-10.

140. PG&E. 2002. "*Code Change Proposal: Time Dependent Valuation (TDV) - Economics Methodology*". Pacific Gas and Electric Company Report to the California Energy Commission, 2005 Title 24 Building Energy Efficiency Standards Update. March 14.

141. PG&E. 2003a. "*Duct Sealing Requirements upon HVAC or Duct-System Replacement: Light Commercial Buildings*". Pacific Gas and Electric Company Draft Report to the California Energy Commission, Codes and Standards Enhancement Initiative, 2005 Title 24 Building Energy Efficiency Standards Update. January 21.

142. PG&E. 2003b. "*Code Change Proposal for Nonresidential Duct Sealing and Insulation, Revised Report*". Pacific Gas and Electric Company Report to the California Energy Commission, Codes and Standards Enhancement Initiative, 2005 Title 24 Building Energy Efficiency Standards Update. January 23.

143. Pietsch, J. 1991. "*Water- Loop Heat Pump Systems: Assessment Study Update*". Electric Power Research Institute, EPRI- CU- 7535, Project 2480- 2, Final Report.

144. Rabehl, R.J., W.A. Beckman, and J.W. Mitchell. 1997. "*Parameter Estimation and The Use of Catalog Data With TRNSYS*". Proceedings of Building Simulation '97, International Building Performance Simulation Association; Prague, Czech Republic; September 8-10.

145. Rock, B.A. and D.J. Wolfe. 1997. "*A Sensitivity Study of Floor and Ceiling Plenum Energy Model Parameters*". ASHRAE Transactions, V. 103, Pt. 1. American Society of Heating, Refrigerating and Air-Conditioning Engineers, Inc.

146. Salsbury, T. and R. Diamond. 1998. "*Performance Validation and Energy Analysis of HVAC Systems using Simulation*". Lawrence Berkeley National Laboratory Report, LBNL-43638.

147. Sathyanarayanan, R., D. Derome, and H. Rivard. 2002. "*The Need for an Integrated Computer-Based Tool to Support Building Envelope Design*". Proceedings of eSim 2002, International Building Performance Simulation Association –Canada; Montréal, Québec, Canada, September 11-13.

148. Schmidt, D. 2002. "*Modelling of Hybrid Building Components with R-C Networks in Macro Elements*". Proceedings of eSim 2002, International Building Performance Simulation Association –Canada; Montréal, Québec, Canada, September 11-13.

149. Sezgen, O., E.M. Franconi, J.G. Koomey, S.E. Greenberg, A. Afzal, and L. Shown. 1995. "*Technology Data Characterizing Space Conditioning in Commercial Buildings: Application to End-Use Forecasting with COMMEND 4.0*". Lawrence Berkeley National Laboratory Report, LBL- 37065. December.

150. Siegel, J.A. 1999. "*The REGCAP Simulation: Predicting Performance in New California Homes*". Master's Thesis, Department of Mechanical Engineering, University of California, Berkeley. May 19.

151. Sohn, M.D., P. Reynolds, N. Singh, and A.J. Gadgil, Ashok. 2000. "*Rapidly Locating and Characterizing Pollutant Releases in Buildings: An Application of Bayesian Data Analysis*". Journal of the Air and Waste Management Association, March. LBNL-47588.

152. Sowell, E. F. and M. A. Moshier. 1995. "*HVAC Component Model Libraries For Equation-Based Solvers*". Proceedings of Building Simulation '95, International Building Performance Simulation Association; Madison, Wisconsin, August 14-16.

153. Sowell, E.F., and P. Haves. 1999. "*Numerical Performance Of The Spark Graph - Theoretic Simulation Program*". Proceedings of Building Simulation '99, International Building Performance Simulation Association; Kyoto, Japan, September 13-15.

154. Sowell, E.F. and P. Haves. 2000. "*Efficient Solution Strategies for Building Energy Simulation*". Lawrence Berkeley National Laboratory Report. LBNL-45936. March.

155. Spitler, J.D., C.O. Pedersen, D.C. Hittle, and D.L. Johnson. 1986. "*Fan Electricity Consumption for Variable Air Volume*". ASHRAE Transactions, V. 92, Pt. 2B. American Society of Heating, Refrigerating and Air-Conditioning Engineers, Inc.

156. Spitler, J.D., D.E. Fisher, and C.O. Pedersen. 1997. "*The Radiant Time Series Cooling Load Calculation Procedure*". ASHRAE Transactions, V. 103, Pt. 2. American Society of Heating, Refrigerating and Air-Conditioning Engineers, Inc.

157. Spitler, J.D., D.E. Fisher, and D.C. Zietlow. 1997. "*A Primer on the Use of Influence Coefficients in Building Simulation*". Report of BLAST Support Office, University of Illinois at Urbana-Champaign.

158. Stoecker, W.F. 1980. "*Design of Thermal Systems*". New York: McGraw-Hill. 2nd Edition.

159. Strand, R.K. 1995. "*Heat Source Transfer Functions and Their Application to Low Temperature Radiant Heating Systems*". Ph.D. Dissertation, University of Illinois at Urbana-Champaign.

160. Strand, R.K. and C.O. Pedersen. 1997. "*Analytical Verification of Heat Source Transfer Functions*". Report of BLAST Support Office, University of Illinois at Urbana-Champaign.

161. Strand, R., C. Pedersen, D. Fisher, R. Liesen, R. Taylor, J. Huang, F. Winkelmann, F. Buhl, S. Crawley, and L. Lawrie. 1999. "*Enhancing And Extending The Capabilities Of The Building Heat Balance Simulation Techniques For Use In EnergyPlus*". Proceedings of Building Simulation '99, International Building Performance Simulation Association; Kyoto, Japan, September 13-15.

162. Strand, R.K., C.O. Pedersen, and D.B. Crawley. 2001. "*Modularization and Simulation Techniques for Heat Balance Based Energy and Load Calculation Programs: The Experience of the ASHRAE Loads Toolkit and EnergyPlus*". Proceedings of Building Simulation '01, International Building Performance Simulation Association; Rio de Janeiro; August 13-15.

163. Strand, R.K., D.E. Fisher, R.J. Liesen, and C.O. Pedersen. 2002. "*Modular HVAC Simulation and the Future Integration of Alternative Cooling Systems in a New Building Energy Simulation Program*". ASHRAE Transactions, V. 108, Pt. 2. American Society of Heating, Refrigerating and Air-Conditioning Engineers, Inc.

164. Strand, R.K., W.F. Buhl, and L.K. Lawrie. 2003. "*EnergyPlus Programming Standard*". Board of Trustees of the University of Illinois and Regents of the University of California through the Ernest Orlando Lawrence Berkeley National Laboratory, U.S. Department of Energy. April 13.

165. Swim, W.B. and E.I. Griggs. 1995. "*Duct Leakage Measurement and Analysis*". ASHRAE Transactions, V. 101, Pt. 1. American Society of Heating, Refrigerating and Air-Conditioning Engineers, Inc.

166. Taylor, R.D., C.O. Pedersen, and L. Lawrie. 1997. "*Simultaneous Simulation of Buildings and Mechanical Systems in Heat Balance Based Energy Analysis Programs*". Report of BLAST Support Office, University of Illinois at Urbana-Champaign.

167. Taylor, R.D., C.O. Pedersen, D.E. Fisher, R.J. Liesen, and L. Lawrie. 1997. "*Impact of Simultaneous Simulation of Buildings and Mechanical Systems in Heat Balance Based Energy Analysis Programs on System Response and Control*". Report of BLAST Support Office, University of Illinois at Urbana-Champaign.

168. Treidler, E.B. and M.P. Modera. 1995. "*Thermal Performance of Residential Duct Systems in Basements*". Lawrence Berkeley National Laboratory Report, LBL-33962. October.

169. Treidler, B., M.P. Modera, R.G. Lucas, and J.D. Miller. 1995. "*Impacts of Residential Duct Insulation on HVAC Energy Use and Life-Cycle Costs to Consumers*". Lawrence Berkeley National Laboratory Draft Report, LBL-37441. October 23.

170. Tsal, R.J., H.F. Behls, and L.P. Varvak. 1998. "*T-Method Duct Design: Part IV - Duct Leakage Theory*". ASHRAE Transactions, V. 104, Pt. 2. American Society of Heating, Refrigerating and Air-Conditioning Engineers, Inc.

171. Tsal, R.J., H.F. Behls, and L.P. Varvak. 1998. "*T-Method Duct Design: Part V: Duct Leakage Calculation Technique and Economics*". ASHRAE Transactions, V. 104, Pt. 2. American Society of Heating, Refrigerating and Air-Conditioning Engineers, Inc.

172. Tsal, R.J. 1998. "*Numerical Modeling of Multi-Fan Air Distribution Systems for Research Laboratories*". Draft Report of NETSAL & Associates, Fountain Valley, CA. September 25.

173. Tsal, R.J. 1999. "*Modeling of Laboratory Air Distribution Systems*". Report of NETSAL & Associates, Fountain Valley, CA. September 4.

174. Walker, I.S. 1993. "*Prediction of Ventilation, Heat Transfer and Moisture Transport in Attics*". Ph.D. Dissertation, Department of Mechanical Engineering, University of Alberta.

175. Walker, I.S., J. Siegel, K. Brown, and M. Sherman. 1999. "*Saving Tons at the Register*". Lawrence Berkeley National Laboratory Report, LBNL-41957.

176. Walker, I., J. Siegel, and G. Degenetais. 2001. "*Simulation of Residential HVAC System Performance*". Lawrence Berkeley National Laboratory Report, LBNL-47622. May.

177. Walker, I., G. Degenetais, and J. Siegel. 2002. "*Simulations of Sizing and Comfort Improvements for Residential Forced-Air Heating and Cooling Systems*". Lawrence Berkeley National Laboratory Report, LBNL 47309. May.

178. Wetter, M. 2001. "*GenOpt® -- A Generic Optimization Program*". Proceedings of Building Simulation '01, International Building Performance Simulation Association; Rio de Janeiro; August 13-15. LBNL-48371.

179. Westphalen, D. and S. Koszalinski. 1999. "*Energy Consumption Characteristics of Commercial Building HVAC Systems – Volume II: Thermal Distribution, Auxiliary Equipment, and Ventilation*". Arthur D. Little, Inc. Report to U.S. Department of Energy, No. 33745-00. October.

180. Winkelmann, F., B. Birdsall, F. Buhl, K. Ellington, E. Erdem, J. Hirsch, and S. Gates. 1993. "*DOE-2 Supplement, Version 2.IE*". Lawrence Berkeley National Laboratory, LBL-34947, November. Also Springfield, Virginia: National Technical Information Service.

181. Witte, M.J., R.H. Henninger, J. Glazer, and D.B. Crawley. 2001. "*Testing and Validation of a New Building Energy Simulation Program*". Proceedings of Building Simulation '01, International Building Performance Simulation Association; Rio de Janeiro; August 13-15.

182. Wray, C.P. and Yuill, G.K. 1990. "*An Annotated Guide to Models and Algorithms for Energy Calculations Relating to HVAC Equipment*". American Society of Heating, Refrigerating and Air-Conditioning Engineers, Inc.

183. Xu, T., O. Bechu, R. Carrié, D. Dickerhoff, W. Fisk, E. Franconi, Ø. Kristiansen, R. Levinson, J. McWilliams, D. Wang, M. Modera, T. Webster, E. Ring, Q. Zhang, C. Huizenga, F. Bauman, and E. Arens. 1999a. "*Commercial Thermal Distribution Systems*". Lawrence Berkeley National Laboratory Report to the California Institute for Energy Efficiency and the California Energy Commission. LBNL-44320. December.

184. Xu, T., R.F. Carrie, D.J. Dickerhoff, W.J. Fisk, J. McWilliams, D. Wang, and M.P. Modera. 1999b. "*Performance of Thermal Distribution Systems in Large Commercial Buildings*". Lawrence Berkeley National Laboratory, LBNL-44331.

185. Yao, R., N. Baker, and M. McEvoy. 2002. "*A Simplified Thermal Resistance Network Model for Building Thermal Simulation*". Proceedings of eSim 2002, International Building Performance Simulation Association –Canada; Montréal, Québec, Canada, September 11-13.

186. Yoon, J.-H., E.-J. Lee. 1999. "*Calibration Procedure Of Energy Performance Simulation Model For A Commercial Building*". Proceedings of Building Simulation '99, International Building Performance Simulation Association; Kyoto, Japan, September 13-15.

187. Zheng, M., Y. Nishitani, S. Hayashi, and N. Nakahara. 1999. "*Comparison of Reproducibility of a Real CAV System By Dynamic Simulation HVACSIM+ and TRNSYS*". Proceedings of Building Simulation '99, International Building Performance Simulation Association; Kyoto, Japan, September 13-15.

188. Zmeureanu, R. 1997. "*Defining the Methodology for the Next-Generation HOT2000 Simulator: Task 1 – Literature Review*". Concordia University Centre for Building Studies Report to Natural Resources Canada. July 21.

189. Zmeureanu, R. 1998. "*Defining the Methodology for the Next-Generation HOT2000 Simulator: Task 3 - Starting Points*". Concordia University Centre for Building Studies Report to Natural Resources Canada. February 15.

APPENDIX II: TRNSYS DUCT PERFORMANCE SUBROUTINES

Subroutine TYPE 70: Fan (Supply or Return)

SUBROUTINE AND FUNCTION CALL MAPPING

Calculate the fan power and leaving air temperature and humidity for fan using simple part load characteristics.

```
        SUBROUTINE TYPE70 (TIME,XIN,OUT,T,DTDT,PAR,INFO,ICNTRL,*)
           CALL TYPECK -- subroutine in TRNWIN\Kernal\typeck.for
           CALL RCHECK -- subroutine in TRNWIN\Kernal\rcheck.for

           hEnt = ENTHALPY5(CPAIR,HFG,CPVAP,TEnt,WEnt) -- F2 in type 70
           rho = RHODRY(PATM,RAIR,TABSADD,TEnt,WEnt) -- F3 in type 70
           TLvg = DRYBULB5(CPAIR,CPVAP,HFG,hLvg,WLvg) -- F1 in type 70

        F1 REAL FUNCTION DRYBULB5 (CPAIR,CPVAP,HFG,H,W)
             Calculate the dry bulb temperature of moist air from enthalpy
             and humidity.

        F2 REAL FUNCTION ENTHALPY5 (CPAIR,HFG,CPVAP,TDB,W)
             Calculate the enthalpy of moist air.

        F3 REAL FUNCTION RHODRY (PATM,RAIR,TABSADD,TDB,W)
             Calculate dry air density.

      PATM     =  101325.0       Atmospheric pressure (Pa)
      CPAIR    =    1006.0       Specific heat of dry air (J/kg C)
      CPVAP    =    1805.0       Specific heat of saturated water vapor (J/kg C)
      HFG      = 2501000.0       Latent heat of vaporization of water (J/kg)
      RAIR     =     287.055     Gas constant for air (J/kg C)
      TABSADD  =     273.15      Additive factor to convert user P to Kelvin:
                                 tKel = Prop(TKelMult)*T + Prop(TKelAdd)
```

SOURCE CODE

```
      SUBROUTINE TYPE70 (TIME,XIN,OUT,T,DTDT,PAR,INFO,ICNTRL,*)
C     SUBROUTINE FANSIM (Prop,P,M,TEnt,WEnt,
C     &                  TLvg,WLvg,Power,ErrStat)
C*********************************************************************
C*    Copyright ASHRAE.  Toolkit for HVAC System Energy Calculations
C*     UPDATED FOR THE TRNSYS-LIBRARY BY RUEDIGER SCHWARZ AND NATE BLAIR
C*********************************************************************
C*    SUBROUTINE: FANSIM
C*
C*    LANGUAGE:   FORTRAN 77
C*
C*    PURPOSE:    Calculate the fan power and leaving
C*                air temperature and humidity for fan
C*                using simple part load characteristics.
C*********************************************************************
C*    INPUT VARIABLES DESCRIPTION(UNITS)                    SAMPLE VALUE
C*    XIN(1)    M     Dry air mass flow rate(kg/s)              3.4
C*    XIN(2)  TEnt    Entering air dry bulb temperature(C)     12.78
C*    XIN(3)  WEnt    Entering air humidity ratio(-)            .00835
C*
C*    OUTPUT VARIABLES
C*    OUT(1)  TLvg    Leaving air dry bulb temperature(C)      14.3358
C*    OUT(2)  WLvg    Leaving air humidity ratio(-)             .00835
C*    OUT(3)  Power   Fan power(W)                            5401.19
C*    OUT(4) ErrStat  Error status indicator,0=ok,1=error(-)    0.0
C*    OUT(5)   PLR    Part load ratio (-)
C*
C*    Note:   If M<0, TEnt and WEnt are assumed to be fan outlet air
C*            conditions, TLvg and WLvg are calculated inlet conditions
```

```
C*
C*    PARAMETERS
C*    PAR(1) EffMot    Motor drive efficiency(-)                    .85
C*    PAR(2) MotorLoss Fraction of motor heat loss to fluid stream  1.0
C*    PAR(3) FlowRated Rated volumetric flow rate(m3/s)             5.664
C*    PAR(4) PowRated  Rated shaft power(W)                     17700.0
C*    PAR(5) PlrContl  Mode for fan control(-)                      3.0
C*                     PlrContl = 1:  Discharge dampers
C*                     PlrContl = 2:  Inlet vanes
C*                     PlrContl = 3:  Variable speed drive
C*                     PlrContl = 4:  Variable speed drive w/ constant s.p. control
C*                     PlrContl = 5:  Cubic
C*********************************************************************
C     MAJOR RESTRICTIONS:     Fan curve fits are independent of pressure
C
C     DEVELOPER:              Shauna Gabel
C                             Michael J. Brandemuehl, PhD, PE
C                             University of Colorado at Boulder
C
C     DATE:                   January 1, 1992
C
C     INCLUDE FILES:          fanpmp.inc
C     SUBROUTINES CALLED:     None
C     FUNCTIONS CALLED:       DRYBULB5
C                             ENTHALPY5
C                             RHODRY
C
C     REVISION HISTORY:       None
C
C     REFERENCE:              BLAST.  1986.  Building Loads Analysis
C                             and System Thermodynamics Program:
C                             User's Manual, Version 3.0. U.S. Army
C                             Construction Engineering Research
C                             Laboratory, Champaign, IL. pp.5-26-5-27.
C*********************************************************************
C     INTERNAL VARIABLES:
C     effFan        Fan efficiency                                (-)
C     hEnt          Entering air enthalpy                      (J/kg)
C     rho           Entering moist air density                (kg/m3)
C     fflp          Fraction of full-load fan power               (-)
C     plr           Part load flow ratio                          (-)
C     powShaft      Shaft power                                   (W)
C     qLoss         Heat transfer to fluid stream                 (W)
C     c(i,PlrContl) Regression coefficients
C     small         Small number used in place of zero
C*********************************************************************

C    $INCLUDE: 'fanpmp.inc'
      DOUBLE PRECISION XIN, OUT

       DIMENSION XIN(3), OUT(5), PAR(5)
      DIMENSION C(4,5), INFO(15)

       INTEGER ErrStat, IOPT, NI, NP, ND, INFO

       REAL M, PAR

       CHARACTER*3 YCHECK(3), OCHECK(5)

       DATA YCHECK/'MF2','TE1','DM1'/
      DATA OCHECK/'TE1','DM1','PW2','DM1','DM1'/
      DATA PATM/101325.0/,CPAIR/1006.0/,CPVAP/1805.0/,HFG/2501000/,
     &     RAIR/287.055/, TABSADD/273.15/

      IOPT  = -1.
      NI    = 3.      !CORRECT NUMBER OF INPUTS
```

```
      NP    = 5.      !CORRECT NUMBER OF PARAMETERS
      ND    = 0.      !CORRECT NUMBER OF DERIVATIVES

      M       = XIN(1)
      TENT    = XIN(2)
      WENT    = XIN(3)

      TLVG    = OUT(1)
      WLVG    = OUT(2)
      POWER   = OUT(3)
      ERRSTAT = OUT(4)
      plr     = OUT(5)

      EFFMOT    = PAR(1)
      MOTORLOSS = PAR(2)
      FLOWRATED = PAR(3)
      POWRATED  = PAR(4)
      PLRCONTL  = PAR(5)

      IF (INFO(7).EQ.-1) THEN
        CALL TYPECK(IOPT,INFO,NI,NP,ND)
C      CHECKS #S IN USER SUPLLIED INFO ARRAY W/ NI, NP, AND ND
        CALL RCHECK(INFO,YCHECK,OCHECK)
C     CHECKS TO SEE IF THE UNITS ARE CONSISTENT
        INFO(6)=4
      ENDIF

C      DIMENSION P(NPFANPMP)

C2*** Set regression coefficients for fraction of full load power
C2***        Discharge dampers
      DATA C/0.3507123,   0.3085, -0.54137, 0.871988,
C2***        Inlet vanes
     &          0.3707,   0.9725,  -0.3424,      0.0,
C2***        Variable speed
     &         0.00153, 0.005208,   1.1086, -0.11635563,
C2***        Variable speed w/ constant static pressure control
     &         0.00441, 0.28808,    0.2626,  0.4498,
C2***        Cubic
     &             0.0,     0.0,       0.0,     1.0/
      DATA small/1.E-9/

      ErrStat = 0

C1*** If flowrate is zero, power is zero
      IF(M .EQ. 0) THEN
        TLVG=TENT
        WLVG=WENT
        POWER=0
        plr=0
        GOTO 999
      ENDIF

C1*** Calculate entering moist air properties
      hEnt = ENTHALPY5(CPAIR,HFG,CPVAP,TEnt,WEnt)
      rho = RHODRY(PATM,RAIR,TABSADD,TEnt,WEnt)

C1*** Calculate the part load ratio based on rated flow
      plr=ABS(M)/rho/FlowRated

C1*** Calculate the fraction of full-load power based on rating point
C2*** fflp = c(1) + c(2)*plr + c(3)*plr**2 + c(4)*plr**3
C2*** Regression coefficients, c(i), vary with control mode
      fflp =c(1,PlrContl)+plr*( c(2,PlrContl)
     &                   +plr*( c(3,PlrContl)
     &                   +plr*  c(4,PlrContl) ) )
```

```
C1*** Calculate the actual fan shaft power and motor power
      powShaft = PowRated*fflp
      Power = powShaft/EffMot

C1*** Calculate the leaving air conditions
C2*** If flow is zero, ABS(M) < small, the value of M is replaces with
C2    small of the same sign as M in calculating hLvg
      qLoss = powShaft + (Power-powShaft)*MotorLoss
      hLvg = hEnt + qLoss/SIGN(MAX(ABS(M),small),M)
      WLvg = WEnt
      TLvg = DRYBULB5(CPAIR,CPVAP,HFG,hLvg,WLvg)

  999 Continue

      OUT(1) = TLVG
      OUT(2) = WLVG
      OUT(3) = POWER
      OUT(4) = ERRSTAT
      OUT(5) = plr

      RETURN 1
      END

      REAL FUNCTION DRYBULB5 (CPAIR,CPVAP,HFG,H,W)
C*********************************************************************
C*    Copyright ASHRAE.  Toolkit for HVAC System Energy Calculations
C*********************************************************************
C*    FUNCTION: DRYBULB5
C*
C*    LANGUAGE: FORTRAN 77
C*
C*    PURPOSE:  Calculate the dry bulb temperature of
C*              moist air from enthalpy and humidity.
C*********************************************************************
C*    INPUT VARIABLES:
C*    H             Enthalpy                                    (J/kg)
C*    W             Humidity ratio                                 (-)
C*
C*    OUTPUT VARIABLES:
C*    Drybulb5       Dry bulb temperature                          (C)
C*
C*    PROPERTIES:
C*    CpAir         Specific heat of air                       (J/kg C)
C*    CpVap         Specific heat of water vapor               (J/kg C)
C*    Hfg           Reference heat of vaporization of water       (J/kg)
C*********************************************************************
C     MAJOR RESTRICTIONS:     Uses perfect gas relationships
C                             Fit for enthalpy of saturated water vapor
C
C     DEVELOPER:              Shauna Gabel
C                             Michael J. Brandemuehl, PhD, PE
C                             University of Colorado at Boulder
C
C     DATE:                   January 1, 1992
C
C     INCLUDE FILES:          PROP.INC
C     SUBROUTINES CALLED:     None
C     FUNCTIONS CALLED:       None
C
C     REVISION HISTORY:       None
C
C     REFERENCE:              1989 ASHRAE Handbook - Fundamentals
C*********************************************************************

C $INCLUDE: 'prop.inc'
```

```
C1*** Calculate the dry bulb temperature as a function of enthalpy and
C1*** humidity ratio.
C2*** hDryAir = Prop(CpAir)*TDB
C2*** hSatVap = Prop(Hfg) + Prop(CpVap)*TDB
C2*** Enthalpy = hDryAir + W*hSatVap

      Drybulb5 = (H-Hfg*W)/(CpAir+CpVap*W)

      RETURN
      END

      REAL FUNCTION ENTHALPY5 (CPAIR,HFG,CPVAP,TDB,W)
C*********************************************************************
C*    Copyright ASHRAE.  Toolkit for HVAC System Energy Calculations
C*********************************************************************
C*    FUNCTION: ENTHALPY5
C*
C*    LANGUAGE: FORTRAN 77
C*
C*    PURPOSE:  Calculate the enthalpy of moist air.
C*********************************************************************
C*    INPUT VARIABLES:
C*    TDB           Dry bulb temperature                            (C)
C*    W             Humidity ratio                                  (-)
C*
C*    OUTPUT VARIABLES:
C*    Enthalpy      Enthalpy of moist air                       (J/kg)
C*
C*    PROPERTIES:
C*    CpAir         Specific heat of air                      (J/kg C)
C*    CpVap         Specific heat of water vapor              (J/kg C)
C*    Hfg           Reference heat of vaporization of water     (J/kg)
C*********************************************************************
C     MAJOR RESTRICTIONS      Uses perfect gas relationships
C                             Fit for enthalpy of saturated water vapor
C
C     DEVELOPER:              Shauna Gabel
C                             Michael J. Brandemuehl, PhD, PE
C                             University of Colorado at Boulder
C
C     DATE:                   January 1, 1992
C
C     INCLUDE FILES:          PROP.INC
C     SUBROUTINES CALLED:     None
C     FUNCTIONS CALLED:       None
C
C     REVISION HISTORY:       None
C
C     REFERENCE:              1989 ASHRAE Handbook - Fundamentals
C*********************************************************************

C $INCLUDE: 'prop.inc'

C1*** Calculate the enthalpy as a function of dry bulb temperature and
C1*** humidity ratio.

      hDryAir = CpAir*TDB
      hSatVap = Hfg + CpVap*TDB
      Enthalpy5 = hDryAir + W*hSatVap

      RETURN
      END

      REAL FUNCTION RHODRY (PATM,RAIR,TABSADD,TDB,W)
C*********************************************************************
```

```
C*    Copyright ASHRAE.  Toolkit for HVAC System Energy Calculations
C***********************************************************************
C*    FUNCTION: RHODRY
C*
C*    LANGUAGE: FORTRAN 77
C*
C*    PURPOSE:  Calculate dry air density.
C***********************************************************************
C*    INPUT VARIABLES
C*    TDB           Dry bulb temperature                            (C)
C*    W             Humidity ratio                                  (-)
C*
C*    OUTPUT VARIABLES
C*    RhoDry        Density of dry air                          (kg/m3)
C*
C*    PROPERTIES
C*    Patm          Atmospheric pressure                           (Pa)
C*    RAir          Gas constant for air                       (J/kg C)
C*    TAbsAdd       Additive constant to convert user T to absolute T
C***********************************************************************
C     MAJOR RESTRICTIONS:     Perfect gas relationships
C
C     DEVELOPER:              Shauna Gabel
C                             Michael J. Brandemuehl, PhD, PE
C                             University of Colorado at Boulder
C
C     DATE:                   January 1, 1992
C
C     INCLUDE FILES:          prop.inc
C     SUBROUTINES CALLED:     None
C     FUNCTIONS CALLED:       None
C
C     REVISION HISTORY:       None
C
C     REFERENCE:              1989 ASHRAE Handbook - Fundamentals
C***********************************************************************
C     INTERNAL VARIABLES:
C     pAir          Partial pressure of dry air                    (Pa)
C***********************************************************************

C $INCLUDE: 'prop.inc'

C1*** Calculate the dry air density from perfect gas laws.

      pAir = 0.62198*Patm/(0.62198+W)
      RhoDry = pAir/RAir/(TDB+TAbsAdd)

      RETURN
      END
```

Subroutine TYPE 75: Cooling Coil

SUBROUTINE AND FUNCTION CALL MAPPING

Model the performance of a counterflow crossflow cooling coil. The model accounts for condensation on the outside surface. Three conditions are possible: all wet, partially wet or all dry. Input includes outlet air setpoint temperature. Water flow rate is changed until desired value is achieved. Output includes outlet air temperature and humidity, outlet water temperature, sensible and total cooling capacities and the wet fraction of air-side surface area.

```
        SUBROUTINE TYPE75 (TIME,XIN,OUT,T,DTDT,PAR,INFO,ICNTRL,*)
           CALL TYPECK(IOPT,INFO,NI,NP,ND) -- subroutine in TRNWIN\Kernal\typeck.for
           CALL RCHECK(INFO,YCHECK,OCHECK) -- subroutine in TRNWIN\Kernal\rcheck.for

           hAirRat = ENTHALPY3(Prop,TAirRat,WAirRat) -- function F2 in type 75
           hLiqRatSat = ENTHSAT(Prop,TLiqRat) -- function F4 in type 75
           wAirLvgRat = HUMTH(Prop,TAirRat,hDummy) -- function F6 in type 75
           tAirLvgRat = DRYBULB3(Prop,hAirLvgRat,wAirLvgRat) -- function F13 in type
75
           tDewRat = DEWPOINT(Prop,WAirRat) -- function F3 in type 75
           cpSat = (ENTHSAT(Prop,tDewRat)-hLiqRatSat) -- function F4 in type 75
     &        /(tDewRat-TLiqRat)
           uaH = UAHX(capAirH,hAirRat,capLiqH,hLiqRatSat,QTotRat, -- function F1
                                                                    in type 75
     &        configHX,ErrStat)
           CALL BYPASS(Prop,TairRat,WAirRat,tAirLvgRat,wAirLvgRat, -- subroutine S5
                                                                     in type 75
     &        tAdpRat,wAdpRat,bfRat,ErrStat)
           hAdpRat = ENTHALPY3(Prop,tAdpRat,wAdpRat) -- function F2 in type 75
           tDewPt = DEWPOINT (Prop,WAirEnt) -- function F3 in type 75
           CALL DRYCOIL (Prop,MLiq,TLiqEnt,MAir,TAirEnt,WAirEnt, -- subroutine S1
                                                                   in type 75
     &        UATot,configHX,
     &        TLiqLvg,TAirLvg,WAirLvg,QTot,ErrStat)
           CALL WETCOIL (Prop,MLiq,TLiqEnt,MAir,TAirEnt,WAirEnt, -- subroutine S2
                                                                   in type 75
     &        UAInt,UAExt,configHX,
     &        TLiqLvg,TAirLvg,WAirLvg,QTot,QSen,FWet,
     &        tSurfEnt,ErrStat)
           mLiq = XITERATE(mLiq,error,X1,F1,X2,F2,iter,icvg) -- function F14
                                                              in type 75
           hAirEnt = MAIR * ENTHALPY3(Prop,TAirEnt,WAirEnt) -- function F2 in type 75

        S1 SUBROUTINE DRYCOIL (Prop,MLiq,TLiqEnt,MAir,TAirEnt,WAirEnt,
     &                    UA,ConfigHX,
     &                    TLiqLvg,TAirLvg,WAirLvg,Q,
     &                    ErrStat)
           Calculate the performance of a sensible air-liquid heat exchanger.
           Calculated results include outlet air temperature and humidity, outlet
           water temperature, and heat transfer rate.
           CALL HEATEX (capLiq,TLiqEnt,capAir,TAirEnt,UA,ConfigHX, -- subroutine S3
                                                                     in type 75
     &        TLiqLvg,TAirLvg)

        S2 SUBROUTINE WETCOIL (Prop,MLiq,TLiqEnt,MAir,TAirEnt,WAirEnt,
     &                    UAIntTot,UAExtTot,ConfigHX,
     &                    TLiqLvg,TAirLvg,WAirLvg,QTot,QSen,FWet,
     &                    TSurfEnt,ErrStat)
           Calculate the performance of a cooling coil when the external fin
           surface is complete wet. Results include outlet air temperature and
           humidity, outlet water temperature, sensible and total cooling
           capacities, and the wet fraction of the air-side surface area.

           hAirEnt = ENTHALPY3(Prop,TAirEnt,WAirEnt) -- function F2 in type 75
           hLiqEntSat = ENTHSAT(Prop,TLiqEnt) -- function F4 in type 75
           tDewEnt = DEWPOINT(Prop,WAirEnt) -- function F3 in type 75
```

```
      cpSat = (ENTHSAT(Prop,tDewEnt)-hLiqEntSat) -- function F4 in type 75
&        /(tDewEnt-TLiqEnt)
      CALL HEATEX(capAirWet,hAirEnt,capLiqWet,hLiqEntSat,uaH, -- subroutine S3
                                                                 in type 75
&        ConfigHX,hAirLvg,hLiqLvgSat)
      TSurfEnt = TAIRSAT(Prop,hSurfEntSat) -- function F11 in type 75
      CALL WCOILOUT (Prop,MAir,TAirEnt,WAirEnt,hAirEnt,hAirLvg, -- subroutine S4
                                                                   in type 75
&        UAExtTot,TAirLvg,WAirLvg,QSen,ErrStat)

   S3 SUBROUTINE HEATEX (Cap1,In1,Cap2,In2,UA,ConfigHX,Out1,Out2)
         Calculate the outlet states of a simple heat exchanger using the
         effectiveness-Ntu method of analysis.

   S4 SUBROUTINE WCOILOUT (Prop,MAir,TAirEnt,WAirEnt,HAirEnt,HAirLvg,
&                    UAExt,TAirLvg,WAirLvg,QSen,ErrStat)
         Calculate the leaving air temperature, the leaving air humidity ratio
         and the sensible cooling capacity of wet cooling coil.
      tempCond = TAIRSAT(Prop,hCondSat) -- function F11 in type 75
      IF (tempCond .LT. DEWPOINT(Prop,WAirEnt)) THEN -- function F3 in type 75
      WAirLvg = HUMTH(Prop,TAirLvg,HAirLvg) -- function F6 in type 75
      TAirLvg = DRYBULB3(Prop,HAirLvg,WAirLvg) -- function F13 in type 75

   S5 SUBROUTINE BYPASS(Prop,TEnt,WEnt,TLvg,WLvg,
&                 TAdp,WAdp,BF,ErrStat)
         Calculate apparatus dew point and bypass factor given entering and
         leaving moist air conditions of cooling coil.
      TAdp = DEWPOINT(Prop,WLvg) -- function F3 in type 75
      WAdp = HUMRATIO(Prop(Patm),SATPRESS(Prop,TAdp)) -- function F5 & F9
                                                        in type 75
      TAdp = XITERATE(TAdp,error,X1,F1,X2,F2,iter,icvg) -- function F14
                                                          in type 75
      hLvg = ENTHALPY3(Prop,TLvg,WLvg) -- function in F2 type 75
      hEnt = ENTHALPY3(Prop,TEnt,WEnt) -- function F2 in type 75
      hAdp = ENTHALPY3(Prop,TAdp,WAdp) -- function F2 in type 75

   F1 REAL FUNCTION UAHX (Cap1,In1,Cap2,In2,Q,ConfigHX,ErrStat)
         Calculate the UA of a heat exchanger using the effectiveness-Ntu
         relationships given the entering capacity rate and temperature of each
         flow stream, the heat transfer rate under these conditions and the heat
         exchanger configuration.
      CALL HEATEX (Cap1,In1,Cap2,In2,ua,ConfigHx,out1,out2) -- subroutine S3
                                                               in type 75
      ua = XITERATE(ua,error,X1,F1,X2,F2,iter,icvg) -- function F14 in type 75

   F2 REAL FUNCTION ENTHALPY3 (Prop,TDB,W)
         Calculate the enthalpy of moist air.

   F3 REAL FUNCTION DEWPOINT (Prop,W)
         Calculate the dewpoint temperature given humidity ratio
      DewPoint = SATTEMP(Prop,pw) -- function F10 in type 75

   F4 REAL FUNCTION ENTHSAT (Prop,TDB)
         Calculate the enthalpy at saturation for given dry bulb temperature
      psat = SATPRESS (Prop,TDB) -- function F9 in type 75
      w = HUMRATIO (Prop(Patm),psat) -- function F5 in type 75
      ENTHSAT = ENTHALPY3 (Prop,TDB,w) -- function F2 in type 75

   F5 REAL FUNCTION HUMRATIO (Patm,Pw)
         Calculate the humidity ratio from water vapor pressure and atmospheric
         Pressure

   F6 REAL FUNCTION HUMTH (Prop,TDB,H)
         Calculate the humidity ratio of moist air from dry bulb temperature and
         enthalpy.
```

```
F7 REAL FUNCTION RELHUM (Patm,Psat,HumRatio)
      Calculate the relative humidity from saturation and atmospheric
      Pressures

F8 REAL FUNCTION RHOMOIST (RhoDry,W)
      Calculate moist air density from dry air density and humidity ratio

F9 REAL FUNCTION SATPRESS (Prop,T)
      Calculate saturation pressure of water vapor as a function of
      temperature

F10 REAL FUNCTION SATTEMP (Prop,P)
       Calculate the saturation (boiling) temperature of water given pressure
   pSat = SATPRESS(Prop,tSat) -- function F9 in type 75
   tSat = XITERATE (tSat,error,X1,F1,X2,F2,iter,icvg) -- function F14
                                                          in type 75

F11 REAL FUNCTION TAIRSAT (Prop,HSat)
       Calculate the dry bulb temperature given enthalpy at saturation.
   error = HSat - ENTHSAT(Prop,tSat) -- function F4 in type 75
   tSat = XITERATE(tSat,error,X1,F1,X2,F2,iter,icvg) -- function F14
                                                        in type 75

F12 REAL FUNCTION WETBULB (Prop,TDB,W)
       Calculate wet bulb temperature from dry bulb temperature and humidity
       ratio
   tBoil = SATTEMP (Prop,Prop(Patm)) -- function F10 in type 75
   psatStar = SATPRESS (Prop,WetBulb) -- function F9 in type 75
   wStar = HUMRATIO (Prop(Patm),psatStar) -- function F5 in type 75
   WetBulb = XITERATE(WetBulb,error,X1,F1,X2,F2,iter,icvg) -- function F14
                                                              in type 75

F13 REAL FUNCTION DRYBULB3 (Prop,H,W)
       Calculate the dry bulb temperature of moist air from enthalpy and
       humidity.

F14 REAL FUNCTION XITERATE (X0,F0,X1,F1,X2,F2,ICount,ICvg)
       Iterately solves for the value of X which satisfies F(X)=0. Given
       Xi,F(Xi) pairs, the subroutine tests for convergence and provides a new
       guess for the value of the independent variable X.

 1 PROP(PATM)     =  101325.0       Atmospheric pressure (Pa)
 2 PROP(CPAIR)    =    1006.0       Specific heat of dry air (J/kg C)
 3 PROP(CPWAT)    =    4186.0       Specific heat of liquid water (J/kg C)
 4 PROP(CPVAP)    =    1805.0       Specific heat of saturated water
                                    vapor (J/kg C)
 5 PROP(CPLIQ)    =    4186.0
 6 PROP(DVISCAIR) =        .0000182 Air dynamic viscosity (kg/m s)
 7 PROP(DVISCLIQ) =        .00144   Liquid dynamic viscosity (kg/m s)
 8 PROP(KAIR)     =        .026     Air thermal conductivity (W/m C)
 9 PROP(KLIQ)     =        .604     Liquid thermal conductivity (W/m C)
10 PROP(RHOLIQ)   =     998.0       Liquid density (kg/m3)
11 PROP(HFG)      = 2501000.0       Latent heat of vaporization of water (J/kg)
12 PROP(RAIR)     =     287.055     Gas constant for air (J/kg C)
13 PROP(TKELMULT) =       1.0       Multiplying factor to convert user
                                    T to Kelvin
14 PROP(TABSADD)  =     273.15      Additive factor to convert user P to Kelvin:
                                    tKel = Prop(TKelMult)*T + Prop(TKelAdd)
15 PROP(PAMULT)   =       1.0       Multiplying factor to convert user P to
                                    Pascals
16 PROP(PABSADD)  =       0.0       Additive factor to convert user P to Pascals:
                                    Pa = Prop(PaMult)*P + Prop(PaAdd)
```

SOURCE CODE

```
      SUBROUTINE TYPE75 (TIME,XIN,OUT,T,DTDT,PAR,INFO,ICNTRL,*)
C*********************************************************************
C*    Copyright ASHRAE.  Toolkit for HVAC System Energy Calculations
C**********************************************************************
C*    SUBROUTINE: CCSIMinverted
C*
C*    LANGUAGE:   FORTRAN 77
C*
C*    PURPOSE:    Model the performance of a counterflow
C*                crossflow cooling coil. The model accounts
C*                for condensation on the outside surface.
C*                Three conditions are possible:  all wet,
C*                partially wet or all dry. Input includes
C*                outlet air setpoint temperature. Water flow
C*                rate is changed until desired value is
C*                achieved. Output includes
C*                outlet air temperature and humidity, outlet
C*                water temperature, sensible and total
C*                cooling capacities and the wet fraction of
C*                air-side surface area.
C*******************************************************************
C*    INPUT VARIABLES  DESCRIPTION(UNITS)                        SAMPLE VALUES
C*    XIN(1)     MLiq Liquid mass flow rate(kg/s)                     4.2
C*    XIN(2)  TLiqEnt Entering water temperature(C)                   5.5556
C*    XIN(3)     MAir Dry air mass flow rate(kg/s)                    3.2
C*    XIN(4)  TAirEnt Entering air dry bulb temperature(C)           25.0
C*    XIN(5)  WAirEnt Entering air humidity ratio(-)                   .01
C*    XIN(6)  Tsp            Leaving air setpoint temperature(C)     11.0
C*
C*    OUTPUT VARIABLES
C*    OUT(1)  TLiqLvg Leaving water temperature(C)                    9.16554
C*    OUT(2)     Mlig Liquid mass flow rate(kg/s)                     4.2
C*    OUT(3)  TAirLvg Leaving air dry bulb temperature(C)            11.0299
C*    OUT(4)  WAirLvg Leaving air humidity ratio(-)                    .0078074
C*    OUT(5)     QTot Total heat transfer rate(W)                 63467.1
C*    OUT(6)     QSen Sensible heat transfer rate(W)              45779.5
C*    OUT(7)     FWet Fraction of surface area wet(-)                 1.0
C*    OUT(8)  HAirent Enthalpy of entering air (J/kg)             30000.
C*    OUT(9)  ErrStat Error status indicator,0=ok,1=error(-)          0.0
C*
C*    PARAMETERS
C*    PAR(1)  MLiqRat Liquid mass flow rate at rating(kg/s)           4.2
C*    PAR(2)  TLiqRat Entering water temperature at rating(C)         5.5556
C*    PAR(3)  MAirRat Dry air mass flow rate at rating(kg/s)          6.4
C*    PAR(4)  TAirRat Entering air dry bulb temperature at rating(C) 26.6667
C*    PAR(5)  WAirRat Entering air humidity ratio at rating(-)         .0112
C*    PAR(6)  QTotRat Total heat transfer rate at rating(W)       88000.0
C*    PAR(7)  QSenRat Sensible heat transfer rate at rating(W)    66000.0
C*
C*    PROPERTIES
C*    CpAir         Dry air specific heat                       (J/kg C)
C*    CpVap         Water vapor specific heat                   (J/kg C)
C*    CpLiq         Liquid specific heat                        (J/kg C)
C*******************************************************************
C     MAJOR RESTRICTIONS:     General application is for heat exchanger
C                             with four or more rows in a counterflow
C                             configuration.
C                             Approximates part-wet operation as
C                             either fully wet or fully dry.
C                             Constant UA.
C
C     DEVELOPER:              Michael J. Brandemuehl, PhD, PE
C                             University of Colorado at Boulder
C
C     DATE:                   January 1, 1992
```

```
C
C     INCLUDE FILES:          coilsim.inc
C                             prop.inc
C     SUBROUTINES CALLED:     DRYCOIL
C                             WETCOIL
C                             HEATEX
C                             UAHX
C                             WCOILOUT
C                             BYPASS
C                             XITERATE
C     FUNCTIONS CALLED:       DEWPOINT
C                             DRYBULB3
C                             ENTHALPY3
C                             ENTHSAT
C                             HUMTH
C
C     REVISION HISTORY:       None
C
C     REFERENCE:              TRNSYS.  1990.  A Transient System
C                             Simulation Program: Reference Manual.
C                             Solar Energy Laboratory, Univ. Wisconsin-
C                             Madison, pp. 4.6.8-1 - 4.6.8-12.
C
C                             Threlkeld, J.L.  1970.  Thermal
C                             Environmental Engineering, 2nd Edition,
C                             Englewood Cliffs: Prentice-Hall,Inc.
C                             pp. 254-270.
C***********************************************************************
C     INTERNAL VARIABLES
C     P(UAExt)      Overall external dry UA/total external area    (W/C)
C     P(UAInt)      Overall internal UA/total external area        (W/C)
C     P(UATot)      Overall heat transfer coefficient              (W/C)
C     uaH           Enthalpy-based overall transfer coefficient   (kg/s)
C     configHX      Heat exchanger configuration                     (-)
C     hAirRat       Entering air enthalpy at rating               (J/kg)
C     hAirLvgRat    Leaving air enthalpy at rating                (J/kg)
C     hAdpRat       Air enthalpy at apparatus dew point at rating (J/kg)
C     hLiqRatSat    Saturated enthalpy at entering liquid temp    (J/kg)
C     tAirLvgRat    Leaving air temperature at rating                (C)
C     tDewRat       Entering air dewpoint at rating                  (C)
C     tSurfEnt      Coil surface temperature at air entrance         (C)
C     capAir        Air-side capacity rate                        (W/C)
C     capAirH       Enthalpy-based air-side capacity rate         (kg/s)
C     capLiqH       Enthalpy-based liquid-side capacity rate      (kg/s)
C     small         Small number in place of zero
C     large         Large number in place of infinity
C***********************************************************************
      DOUBLE PRECISION XIN,OUT

      DIMENSION XIN(6),OUT(9),PAR(7),INFO(15)

      INTEGER Patm,CpAir,CpWat,CpLiq,CpVap,DViscAir,
     &        DViscLiq,KAir,KLiq,RhoLiq,Hfg,RAir,
     &        TKelMult,TAbsAdd,PaMult,PAbsAdd,ERRSTAT,
     &        iter,itmax

      REAL Prop(16),LARGE,UATOT,UAINT,UAEXT,PAR,MLIQ,MAIR,
     &     Tsp,error,Hairent,Mairrat,Mliqrat

      INTEGER INFO,IOPT,NI,NP,ND

      CHARACTER*3 YCHECK(6),OCHECK(9)

      COMMON /LUNITS/LUR,LUW,IFORM,LUK

      PARAMETER (Patm     = 1)
```

```
      PARAMETER (CpAir    = 2)
      PARAMETER (CpWat    = 3)
      PARAMETER (CpVap    = 4)
      PARAMETER (CpLiq    = 5)
      PARAMETER (DViscAir = 6)
      PARAMETER (DViscLiq = 7)
      PARAMETER (KAir     = 8)
      PARAMETER (KLiq     = 9)
      PARAMETER (RhoLiq   = 10)
      PARAMETER (Hfg      = 11)
      PARAMETER (RAir     = 12)
      PARAMETER (TKelMult = 13)
      PARAMETER (TAbsAdd  = 14)
      PARAMETER (PaMult   = 15)
      PARAMETER (PAbsAdd  = 16)

      PROP(PATM)     =  101325.0
      PROP(CPAIR)    =    1006.0
      PROP(CPWAT)    =    4186.0
      PROP(CPVAP)    =    1805.0
      PROP(CPLIQ)    =    4186.0
      PROP(DVISCAIR) =        .0000182
      PROP(DVISCLIQ) =        .00144
      PROP(KAIR)     =        .026
      PROP(KLIQ)     =        .604
      PROP(RHOLIQ)   =     998.0
      PROP(HFG)      = 2501000.0
      PROP(RAIR)     =     287.055
      PROP(TKELMULT) =       1.0
      PROP(TABSADD)  =     273.15
      PROP(PAMULT)   =       1.0
      PROP(PABSADD)  =       0.0

      DATA small/1.E-9/, large /1.E20/, configHX /1./
      DATA YCHECK/'MF2','TE1','MF2','TE1','DM1','TE1'/
      DATA OCHECK/'TE1','MF2','TE1','DM1','PW2','PW2','DM1','PW2','DM1'/
      DATA itmax/50/

      ErrStat = 0
      IOPT    = -1
      NI      = 6            !CORRECT NUMBER OF INPUTS
      NP      = 7            !CORRECT NUMBER OF PARAMETERS
      ND      = 0            !CORRECT NUMBER OF DERIVATIVES

      MLIQ    = XIN(1)
      TLIQENT = XIN(2)
      MAIR    = XIN(3)
      TAIRENT = XIN(4)
      WAIRENT = XIN(5)
      TSP     = XIN(6)

      MLIQRAT = PAR(1)
      TLIQRAT = PAR(2)
      MAIRRAT = PAR(3)
      TAIRRAT = PAR(4)
      WAIRRAT = PAR(5)
      QTOTRAT = PAR(6)
      QSENRAT = PAR(7)

      IF (INFO(7).EQ.-1) THEN
            CALL TYPECK(IOPT,INFO,NI,NP,ND)
C       CHECKS TO SEE IF USER'S INFO MATCHES CORRECT NUMBERS
            CALL RCHECK(INFO,YCHECK,OCHECK)
C       CHECKS TO SEE IF INPUT AND OUTPUT UNITS MATCH
          INFO(6)=9
      ENDIF
```

```
C1*** If economizer meets supply air temp setpoint then no coil load
      If (TSP .GE. TAIRENT) THEN
        TLIQLVG=TLIQENT
        MLIQ=0.
        TAIRLVG=TAIRENT
        WAIRLVG=WAIRENT
        QTOT=0.
        QSEN=0.
        FWET=0.
        GOTO 999
      ENDIF

C2*********************************************************************
C2    The code between these bars of asterisks is used to set internal
C2    parameters and is independent of component input values.  In an
C2    hourly simulation, this block of code may be skipped after the
C2    first call.

C1*** Calculate properties of air and liquid at rating point
      hAirRat = ENTHALPY3(Prop,TAirRat,WAirRat)
      hLiqRatSat = ENTHSAT(Prop,TLiqRat)

C1*** Calculate leaving air states at rating point
      hAirLvgRat = hAirRat - QTotRat/MAirRat
      hDummy = hAirRat - (QTotRat-QSenRat)/MAirRat
      wAirLvgRat = HUMTH(Prop,TAirRat,hDummy)
      tAirLvgRat = DRYBULB3(Prop,hAirLvgRat,wAirLvgRat)

C1*** Calculate coil UA assuming wet coil at rating

C2***   Heat transfer in a wet coil is calculated based on enthalpy
C2***   rather than temperature to include latent effects.  Air enthalpies
C2***   are evaluated using conventional psychrometric equations.  The
C2***   corresponding enthalpies of the coil and water are related to
C2***   that of the air through "fictitious enthalpies," defined as the
C2***   enthalpy of saturated air at the temperature of the coil or water.
C2
C2***   While heat transfer rates are commonly expressed as the product
C2***   of an overall heat transfer coefficient, UA, and a temperature
C2***   difference, the use of enthalpy-based heat transfer calculations
C2***   requires an enthalpy-based heat transfer coefficient, UAH.
C2
C2***       q = UAH * (H1-H2)
C2
C2***   where UAH = UA / cp
C2***         UA = conventional heat transfer coefficient
C2***         cp = specific heat across enthalpy difference
C2
C2***   When using fictitious enthalpies, a corresponding fictitious
C2***   specific heat must be defined.
C2
C2***       EnthSat1-EnthSat2 = cpSat * (Temp1-Temp2)
C2
C2***   UAH can be calculated from a combination of series or parallel
C2***   enthalpy resistances, similar to thermal resistances modified for
C2***   enthalpy as above.  Enthalpy capacity rates relate heat transfer
C2***   to the enthalpy change of a fluid between inlet and outlet.
C2
C2***       q = CapH * (HAirLvg - HAirEnt)
C2
C2***   On the air side, enthalpy capacity rate is the air mass flow rate.
C2***   On the water side, the enthalpy capacity rate is based on the
C2***   enthalpy of saturated air at the water temperature.

C1*** Estimate cpSat using entering air dewpoint and water temperature
```

```
      tDewRat = DEWPOINT(Prop,WAirRat)
      cpSat = (ENTHSAT(Prop,tDewRat)-hLiqRatSat)
     &        /(tDewRat-TLiqRat)

C1*** Calculate overall heat transfer coefficient from fluid states
C1*** and known total heat transfer
      capAirH = MAirRat
      capLiqH = MLiqRat * (Prop(CpLiq)/cpSat)
      uaH = UAHX(capAirH,hAirRat,capLiqH,hLiqRatSat,QTotRat,
     &            configHX,ErrStat)

C1*** Determine air-side coefficient, UAExt, assuming that the
C1*** surface temperature is at the apparatus dewpoint temperature
      CALL BYPASS(Prop,TairRat,WAirRat,tAirLvgRat,wAirLvgRat,
     &            tAdpRat,wAdpRat,bfRat,ErrStat)
      hAdpRat = ENTHALPY3(Prop,tAdpRat,wAdpRat)

      IF (hAdpRat .LE. hLiqRatSat) THEN
        UAExt = uaH*Prop(CpAir)
      ELSE
        capAir = MAirRat*(Prop(CpAir)+WAirRat*Prop(CpVap))
        UAExt = -LOG(bfRat)*capAir
      ENDIF

C1*** Calculate liquid-side coefficient, UAInt, from enthalpy-based
C1*** overall coefficient and air-side coefficient
      UAInt = cpSat/MIN((1./uaH - Prop(CpAir)/UAExt),large)
      UATot = 1./(1./UAExt+1./UAInt)

C2*********************************************************************

C1*** If both flows are zero, set outputs to inputs and return

      IF (ABS(MAir) .LT. small .AND. ABS(MLiq) .LT. small) THEN
        TLiqLvg = TLiqEnt
        TAirLvg = TAirEnt
        WAirLvg = WAirEnt
        GO TO 999
      ENDIF

C1*** BEGIN LOOP
      DO 100 iter = 1 ,itmax
C1*** IF coil is completely dry THEN
        tDewPt = DEWPOINT (Prop,WAirEnt)
        IF (tDewPt .LE. TLiqEnt) THEN
C1*** Calculate the leaving conditions and performance of dry coil
          CALL DRYCOIL (Prop,MLiq,TLiqEnt,MAir,TAirEnt,WAirEnt,
     &                  UATot,configHX,
     &                  TLiqLvg,TAirLvg,WAirLvg,QTot,ErrStat)
          QSen = QTot
          FWet = 0.
        ELSE
C1*** ELSE Assume external surface of coil is completely wet
C1*** Calculate the leaving conditions and performance of wet coil
          CALL WETCOIL (Prop,MLiq,TLiqEnt,MAir,TAirEnt,WAirEnt,
     &                  UAInt,UAExt,configHX,
     &                  TLiqLvg,TAirLvg,WAirLvg,QTot,QSen,FWet,
     &                  tSurfEnt,ErrStat)
C1*** IF coil is only partially wet THEN
C       IF (tDewPt .LT. tSurfEnt) THEN
C1*** Calculate the leaving conditions and performance of dry coil
C         CALL DRYCOIL (Prop,MLiq,TLiqEnt,MAir,TAirEnt,WAirEnt,
C    &                UATot,configHX,
C    &                dryTLiqLvg,dryTAirLvg,dryWAirLvg,dryQTot,ErrStat)
C1*** IF heat transfer from drycoil calculations is greater than that
C1*** from wetcoil calculations THEN approximate the coil as dry.
```

```
C         IF (dryQTot .GT. QTot) THEN
C           TLiqLvg = dryTLiqLvg
C           TAirLvg = dryTAirLvg
C           WAirLvg = dryWAirLvg
C           QTot = dryQTot
C            QSen = QTot
C            FWet = 0.
C         ENDIF
C       ENDIF
        ENDIF
C1*** Compare given leaving air temperature with estimated temperature
C1*** and determine new estimate of flow
      error = TAirLvg-Tsp
      mLiq = XITERATE(mLiq,error,X1,F1,X2,F2,iter,icvg)
C1*** If converged, leave loop
        IF (icvg .EQ. 1) GO TO 999
C1*** If estimated flow is less than zero, set to small number
        IF(MLiq.LT.0) MLiq = 0.
 100  CONTINUE

C1*** If not converged after itmax iterations, return error code
      WRITE(LUW,1005) itmax
 1005 FORMAT(/1X,'*** ERROR IN SUBROUTINE COILINV ***'/
     &        1X,'    Temperature has not converged after',I2,
     &        '  iterations'/)
      ErrStat = 1

999   CONTINUE

      hAirEnt = MAIR * ENTHALPY3(Prop,TAirEnt,WAirEnt)

      OUT(1) = TLIQLVG
      OUT(2) = MLIQ
      OUT(3) = TAIRLVG
      OUT(4) = WAIRLVG
      OUT(5) = QTOT
      OUT(6) = QSEN
      OUT(7) = FWET
      OUT(8) = hAirEnt
      OUT(9) = ERRSTAT

      RETURN 1
      END

C*********************************************************************
C*    FILE: PROP.INC
C*
C*    This file assigns a numbers to air and water property names to be
C*    used in the "Prop" array.
C*********************************************************************
C     DEVELOPER:         Inger Andresen
C                        Michael J. Brandemuehl, PhD, PE
C
C     DATE:              July 1, 1991
C
C     FILES REQUIRED:    None
C*********************************************************************
C     INTERNAL VARIABLES:
C     Patm          Atmospheric pressure                          (Pa)
C     CpAir         Specific heat of dry air                   (J/kg C)
C     CpLiq         Specific heat of liquid water              (J/kg C)
C     CpVap         Specific heat of saturated water vapor     (J/kg C)
C     DViscAir      Air dynamic viscosity                      (kg/m s)
C     DViscLiq      Liquid dynamic viscosity                   (kg/m s)
C     KAir          Air thermal conductivity                    (W/m C)
C     KLiq          Liquid thermal conductivity                 (W/m C)
```

```
C     RhoLiq        Liquid density                              (kg/m3)
C     Hfg           Latent heat of vaporization of water         (J/kg)
C     RAir          Gas constant for air                       (J/kg C)
C     TKelMult      Multiplying factor to convert user T to Kelvin
C     TAbsAdd       Additive factor to convert user P to Kelvin
C                   tKel = Prop(TKelMult)*T + Prop(TKelAdd)
C     PaMult        Multiplying factor to convert user P to Pascals
C     PAbsAdd       Additive factor to convert user P to Pascals
C                   Pa = Prop(PaMult)*P + Prop(PaAdd)
C*********************************************************************
C
C      INTEGER Patm,CpAir,CpWat,CpLiq,CpVap,DViscAir,
C     &        DViscLiq,KAir,KLiq,RhoLiq,Hfg,RAir,
C     &        TKelMult,TAbsAdd,PaMult,PAbsAdd
C      REAL Prop(16)
C
C      PARAMETER (Patm     = 1)
C      PARAMETER (CpAir    = 2)
C      PARAMETER (CpWat    = 3)
C      PARAMETER (CpVap    = 4)
C      PARAMETER (CpLiq    = 5)
C      PARAMETER (DViscAir = 6)
C      PARAMETER (DViscLiq = 7)
C      PARAMETER (KAir     = 8)
C      PARAMETER (KLiq     = 9)
C      PARAMETER (RhoLiq   = 10)
C      PARAMETER (Hfg      = 11)
C      PARAMETER (RAir     = 12)
C      PARAMETER (TKelMult = 13)
C      PARAMETER (TAbsAdd  = 14)
C      PARAMETER (PaMult   = 15)
C      PARAMETER (PAbsAdd  = 16)

      SUBROUTINE DRYCOIL (Prop,MLiq,TLiqEnt,MAir,TAirEnt,WAirEnt,
     &                    UA,ConfigHX,
     &                    TLiqLvg,TAirLvg,WAirLvg,Q,
     &                    ErrStat)
C*********************************************************************
C*    Copyright ASHRAE.  Toolkit for HVAC System Energy Calculations
C*********************************************************************
C*    SUBROUTINE: DRYCOIL
C*
C*    LANGUAGE:   FORTRAN 77
C*
C*    PURPOSE:    Calculate the performance of a sensible
C*                air-liquid heat exchanger.  Calculated
C*                results include outlet air temperature
C*                and humidity, outlet water temperature,
C*                and heat transfer rate.
C*********************************************************************
C*    INPUT VARIABLES
C*    MLiq          Liquid mass flow rate                        (kg/s)
C*    TLiqEnt       Entering water temperature                     (C)
C*    MAir          Dry air mass flow rate                       (kg/s)
C*    TAirEnt       Entering air dry bulb temperature              (C)
C*    WAirEnt       Entering air humidity ratio                    (-)
C*
C*    UA            Overall heat transfer coefficient             (W/C)
C*    ConfigHX      Heat exchanger configuration                   (-)
C*                  1 - Counterflow
C*                  2 - Parallel flow
C*                  3 - Cross flow, both streams unmixed
C*                  4 - Cross flow, both streams mixed
C*                  5 - Cross flow, stream 1 unmixed
C*                  6 - Cross flow, stream 2 unmixed
C*
```

```
C*    OUTPUT VARIABLES
C*    TLiqLvg       Leaving water temperature                        (C)
C*    TAirLvg       Leaving air dry bulb temperature                 (C)
C*    WAirLvg       Leaving air humidity ratio                       (-)
C*    Q             Heat transfer rate                               (W)
C*    ErrStat       Error status indicator, 0 = ok, 1 = error        (-)
C*
C*    PROPERTIES
C*    CpAir         Specific heat of air                       (J/kg C)
C*    CpVap         Specific heat of water vapor               (J/kg C)
C*    CpLiq         Specific heat of liquid                    (J/kg C)
C***********************************************************************
C     MAJOR RESTRICTIONS:     Models coil using effectiveness-Ntu model.
C
C     DEVELOPER:              Shauna Gabel
C                             Michael J. Brandemuehl, PhD, PE
C                             University of Colorado at Boulder
C
C     DATE:                   January 1, 1992
C
C     INCLUDE FILES:          prop.inc
C     SUBROUTINES CALLED:     HEATEX
C     FUNCTIONS CALLED:       None
C
C     REVISION HISTORY:       None
C
C     REFERENCE:              Kays, W.M. and A.L. London.  1964.
C                             Compact Heat Exchangers, 2nd Edition,
C                             New York: McGraw-Hill.
C
C                             Threlkeld, J.L.  1970.  Thermal
C                             Environmental Engineering, 2nd Edition,
C                             Englewood Cliffs: Prentice-Hall, Inc.
C                             pp. 254-270.
C***********************************************************************
C     INTERNAL VARIABLES:
C     capAir        Air-side capacity rate                         (W/C)
C     capLiq        Water-side capacity rate                       (W/C)
C***********************************************************************
      INTEGER Patm,CpAir,CpWat,CpLiq,CpVap,DViscAir,
     &        DViscLiq,KAir,KLiq,RhoLiq,Hfg,RAir,
     &        TKelMult,TAbsAdd,PaMult,PAbsAdd

      REAL Prop(16)

      PARAMETER (Patm     = 1)
      PARAMETER (CpAir    = 2)
      PARAMETER (CpWat    = 3)
      PARAMETER (CpVap    = 4)
      PARAMETER (CpLiq    = 5)
      PARAMETER (DViscAir = 6)
      PARAMETER (DViscLiq = 7)
      PARAMETER (KAir     = 8)
      PARAMETER (KLiq     = 9)
      PARAMETER (RhoLiq   = 10)
      PARAMETER (Hfg      = 11)
      PARAMETER (RAir     = 12)
      PARAMETER (TKelMult = 13)
      PARAMETER (TAbsAdd  = 14)
      PARAMETER (PaMult   = 15)
      PARAMETER (PAbsAdd  = 16)

      REAL MAir,MLiq

      INTEGER Errstat
```

```
      Errstat = 0

C2*** Calculate air and water capacity rates
      capAir = MAir*(Prop(CpAir)+WAirEnt*Prop(CpVap))
      capLiq = MLiq*Prop(CpLiq)

C1*** Determine the air and water outlet conditions
      CALL HEATEX (capLiq,TLiqEnt,capAir,TAirEnt,UA,ConfigHX,
     &             TLiqLvg,TAirLvg)

C1*** Calculate the total and sensible heat transfer rate
      Q = capAir*(TAirEnt-TAirLvg)
      WAirLvg = WAirEnt

      RETURN
      END

      SUBROUTINE WETCOIL (Prop,MLiq,TLiqEnt,MAir,TAirEnt,WAirEnt,
     &                    UAIntTot,UAExtTot,ConfigHX,
     &                    TLiqLvg,TAirLvg,WAirLvg,QTot,QSen,FWet,
     &                    TSurfEnt,ErrStat)
C*********************************************************************
C*    Copyright ASHRAE.  Toolkit for HVAC System Energy Calculations
C*********************************************************************
C*    SUBROUTINE: WETCOIL
C*
C*    LANGUAGE:   FORTRAN 77
C*
C*    PURPOSE:    Calculate the performance of a cooling
C*                coil when the external fin surface is
C*                complete wet.  Results include
C*                outlet air temperature and humidity,
C*                outlet water temperature, sensible and
C*                total cooling capacities, and the wet
C*                fraction of the air-side surface area.
C*********************************************************************
C*    INPUT VARIABLES
C*    MLiq          Liquid mass flow rate                        (kg/s)
C*    TLiqEnt       Entering water temperature                      (C)
C*    MAir          Dry air mass flow rate                       (kg/s)
C*    TAirEnt       Entering air dry bulb temperature               (C)
C*    WAirEnt       Entering air humidity ratio                     (-)
C*
C*    UAIntTot      Internal overall heat transfer coefficient  (W/m2 C)
C*    UAExtTot      External overall heat transfer coefficient  (W/m2 C)
C*    ConfigHX      Heat exchanger configuration                    (-)
C*                  1 - Counterflow
C*                  2 - Parallel flow
C*                  3 - Cross flow, both streams unmixed
C*                  4 - Cross flow, both streams mixed
C*                  5 - Cross flow, stream 1 unmixed
C*                  6 - Cross flow, stream 2 unmixed
C*
C*    OUTPUT VARIABLES
C*    TLiqLvg       Leaving water temperature                       (C)
C*    TAirLvg       Leaving air dry bulb temperature                (C)
C*    WAirLvg       Leaving air humidity ratio                      (-)
C*    QTot          Total heat transfer rate                        (W)
C*    QSen          Sensible heat transfer rate                     (W)
C*    FWet          Fraction of surface area wet                    (-)
C*    TSurfEnt      Surface temperature at air entrance             (C)
C*    ErrStat       Error status indicator, 0 = ok, 1 = error       (-)
C*
C*    PROPERTIES
C*    CpLiq         Specific heat of liquid                    (J/kg C)
C*    CpAir         Specific heat of dry air                   (J/kg C)
```

```
C*********************************************************************
C     MAJOR RESTRICTIONS:     Models coil as counterflow heat exchanger
C                             Approximates saturated air enthalpy as
C                             a linear function of temperature
C
C     DEVELOPER:              Shauna Gabel
C                             Michael J. Brandemuehl, PhD, PE
C                             University of Colorado at Boulder
C
C     DATE:                   January 1, 1992
C
C     INCLUDE FILES:          prop.inc
C     SUBROUTINES CALLED:     HEATEX
C                             WCOILOUT
C     FUNCTIONS CALLED:       ENTHALPY3
C                             ENTHSAT
C                             TAIRSAT
C
C     REVISION HISTORY:       None
C
C     REFERENCE:              Elmahdy, A.H. and Mitalas, G.P.  1977.
C                             "A Simple Model for Cooling and
C                             Dehumidifying Coils for Use In Calculating
C                             Energy Requirements for Buildings,"
C                             ASHRAE Transactions,Vol.83 Part 2,
C                             pp. 103-117.
C
C                             TRNSYS.  1990.  A Transient System
C                             Simulation Program: Reference Manual.
C                             Solar Energy Laboratory, Univ. Wisconsin-
C                             Madison, pp. 4.6.8-1 - 4.6.8-12.
C
C                             Threlkeld, J.L.  1970.  Thermal
C                             Environmental Engineering, 2nd Edition,
C                             Englewood Cliffs: Prentice-Hall,Inc.
C                             pp. 254-270.
C*********************************************************************
C     INTERNAL VARIABLES:
C     extResist     Air-side resistance to heat transfer        (m2 C/W)
C     intResist     Liquid-side resistance to heat transfer     (m2 C/W)
C     tDewEnt       Entering air dew point                           (C)
C     uaH           Overall enthalpy heat transfer coefficient    (kg/s)
C     capAirWet     Air-side capacity rate                        (kg/s)
C     capLiqWet     Liquid-side capacity rate                     (kg/s)
C     resistRatio   Ratio of resistances                             (-)
C     hAirLvg       Outlet air enthalpy
C     hLiqEntSat    Saturated enthalpy of air at                  (J/kg)
C                   entering water temperature
C     hLiqLvgSat    Saturated enthalpy of air at exit             (J/kg)
C                   water temperature
C     hSurfEntSat   Saturated enthalpy of air at                  (J/kg)
C                   entering surface temperature
C     hSurfLvgSat   Saturated enthalpy of air at exit             (J/kg)
C                   surface temperature
C     cpSat         Coefficient for equation below              (J/kg C)
C                   EnthSat1-EnthSat2 = cpSat*(TSat1-TSat2)
C                   (all water and surface temperatures are
C                   related to saturated air enthalpies for
C                   wet surface heat transfer calculations)
C*********************************************************************
      INTEGER Patm,CpAir,CpWat,CpLiq,CpVap,DViscAir,
     &        DViscLiq,KAir,KLiq,RhoLiq,Hfg,RAir,
     &        TKelMult,TAbsAdd,PaMult,PAbsAdd

      REAL Prop(16)
```

```
      PARAMETER (Patm     = 1)
      PARAMETER (CpAir    = 2)
      PARAMETER (CpWat    = 3)
      PARAMETER (CpVap    = 4)
      PARAMETER (CpLiq    = 5)
      PARAMETER (DViscAir = 6)
      PARAMETER (DViscLiq = 7)
      PARAMETER (KAir     = 8)
      PARAMETER (KLiq     = 9)
      PARAMETER (RhoLiq   = 10)
      PARAMETER (Hfg      = 11)
      PARAMETER (RAir     = 12)
      PARAMETER (TKelMult = 13)
      PARAMETER (TAbsAdd  = 14)
      PARAMETER (PaMult   = 15)
      PARAMETER (PAbsAdd  = 16)

      REAL MAir,MLiq,intResist

      INTEGER ErrStat

      DATA small/1.E-9/

      FWet = 1.
      extResist = 1./UAExtTot
      intResist = 1./UAIntTot

C1*** Calculate enthalpies of entering air and water
      hAirEnt = ENTHALPY3(Prop,TAirEnt,WAirEnt)
      hLiqEntSat = ENTHSAT(Prop,TLiqEnt)

C1*** Estimate cpSat using entering air dewpoint and water temperature
      tDewEnt = DEWPOINT(Prop,WAirEnt)
      cpSat = (ENTHSAT(Prop,tDewEnt)-hLiqEntSat)
     &        /(tDewEnt-TLiqEnt)

C1*** Enthalpy-based heat transfer calculations

C2***   Heat transfer in a wet coil is calculated based on enthalpy
C2***   rather than temperature to include latent effects.  Air enthalpies
C2***   are evaluated using conventional psychrometric equations.  The
C2***   corresponding enthalpies of the coil and water are related to
C2***   that of the air through "fictitious enthalpies," defined as the
C2***   enthalpy of saturated air at the temperature of the coil or water.
C2
C2***   While heat transfer rates are commonly expressed as the product
C2***   of an overall heat transfer coefficient, UA, and a temperature
C2***   difference, the use of enthalpy-based heat transfer calculations
C2***   requires an enthalpy-based heat transfer coefficient, UAH.
C2
C2***       q = UAH * (H1-H2)
C2
C2***   where UAH = UA / cp
C2***         UA = conventional heat transfer coefficient
C2***         cp = specific heat across enthalpy difference
C2
C2***   When using fictitious enthalpies, a corresponding fictitious
C2***   specific heat must be defined.
C2
C2***       EnthSat1-EnthSat2 = cpSat * (Temp1-Temp2)
C2
C2***   UAH can be calculated from a combination of series or parallel
C2***   enthalpy resistances, similar to thermal resistances modified for
C2***   enthalpy as above.  Enthalpy capacity rates relate heat transfer
C2***   to the enthalpy change of a fluid between inlet and outlet.
C2
```

```
C2***       q = CapH * (HAirLvg - HAirEnt)
C2
C2***   On the air side, enthalpy capacity rate is the air mass flow rate.
C2***   On the water side, the enthalpy capacity rate is based on the
C2***   enthalpy of saturated air at the water temperature.

C1*** Determine air and water enthalpy outlet conditions by modeling
C1*** coil as counterflow enthalpy heat exchanger
        uaH = 1./(cpSat*intResist+Prop(CpAir)*extResist)
        capAirWet = MAir
        capLiqWet = MLiq * (Prop(CpLiq)/cpSat)
        CALL HEATEX(capAirWet,hAirEnt,capLiqWet,hLiqEntSat,uaH,
     &              ConfigHX,hAirLvg,hLiqLvgSat)

C1*** Calculate entering and leaving external surface conditions from
C1*** air and water conditions and the ratio of resistances
        resistRatio = (intResist)/(intResist +
     &               Prop(CpAir)/cpSat*extResist)
        hSurfEntSat = hLiqLvgSat + resistRatio*(hAirEnt-hLiqLvgSat)
        hSurfLvgSat = hLiqEntSat + resistRatio*(hAirLvg-hLiqEntSat)
        TSurfEnt = TAIRSAT(Prop,hSurfEntSat)

C1*** Calculate outlet air temperature and humidity from enthalpies and
C1*** surface conditions.
      QTot = MAir*(hAirEnt-hAirLvg)
      TLiqLvg = TLiqEnt+QTot/MAX(MLiq,small)/Prop(CpLiq)
      CALL WCOILOUT (Prop,MAir,TAirEnt,WAirEnt,hAirEnt,hAirLvg,
     &               UAExtTot,TAirLvg,WAirLvg,QSen,ErrStat)

  999 RETURN
      END

      SUBROUTINE HEATEX (Cap1,In1,Cap2,In2,UA,ConfigHX,Out1,Out2)
C*********************************************************************
C*    Copyright ASHRAE.  Toolkit for HVAC System Energy Calculations
C*********************************************************************
C*    SUBROUTINE: HEATEX
C*
C*    LANGUAGE:   FORTRAN 77
C*
C*    PURPOSE:    Calculate the outlet states of a simple
C*                heat exchanger using the effectiveness-Ntu
C*                method of analysis.
C*********************************************************************
C*    INPUT VARIABLES
C*    Cap1          Capacity rate of stream 1                     (W/C)
C*    In1           Inlet state of stream 1                         (C)
C*    Cap2          Capacity rate of stream 2                     (W/C)
C*    In2           Inlet state of stream 2                         (C)
C*    UA            Overall heat transfer coefficient             (W/C)
C*    ConfigHX      Heat exchanger configuration                    (-)
C*                  1 - Counterflow
C*                  2 - Parallel flow
C*                  3 - Cross flow, both streams unmixed
C*                  4 - Cross flow, both streams mixed
C*                  5 - Cross flow, stream 1 unmixed
C*                  6 - Cross flow, stream 2 unmixed
C*
C*    OUTPUT VARIABLES
C*    Out1          Outlet state of stream 1                        (C)
C*    Out2          Outlet state of stream 2                        (C)
C*********************************************************************
C     MAJOR RESTRICTIONS:     None
C
C     DEVELOPER:              Shauna Gabel
C                             Michael J. Brandemuehl, PhD, PE
```

```
C                               University of Colorado at Boulder
C
C     DATE:                     January 1, 1992
C
C     INCLUDE FILES:            None
C     SUBROUTINES CALLED:       None
C     FUNCTIONS CALLED:         None
C
C     REVISION HISTORY:         None
C
C     REFERENCE:                Kays, W.M. and A.L. London.  1964.
C                               Compact Heat Exchangers, 2nd Ed., McGraw-
C                               Hill:  New York.
C*********************************************************************
C*    INTERNAL VARIABLES:
C*    cMin          Minimum capacity rate of the streams           (W/C)
C*    cMax          Maximum capacity rate of the streams           (W/C)
C*    cRatio        Ratio of minimum to maximum capacity rate
C*    ntu           Number of transfer units                         (-)
C*    effectiveness Heat exchanger effectiveness                     (-)
C*    qMax          Maximum heat transfer possible                   (W)
C*********************************************************************
      REAL ntu,qMax,In1,In2,large

      DATA small/1.E-15/, large/1.E15/

C1*** Ntu and Cmin/Cmax (cRatio) calculations
      cMin = MIN(Cap1,Cap2)
      cMax = MAX(Cap1,Cap2)

      IF( cMax .EQ. 0.) THEN
        cRatio = 1.
      ELSE
        cRatio = cMin/cMax
      ENDIF

      IF( cMin .EQ. 0.) THEN
        ntu = large
      ELSE
        ntu = ua/cMin
      ENDIF

C1*** Calculate effectiveness for special limiting cases
      mode = NINT(ConfigHX)
      IF(ntu .LE. 0) THEN
        effectiveness = 0.
      ELSE IF(cRatio .LT. small) THEN
C2*** Cmin/Cmax = 0 and effectiveness is independent of configuration
        effectiveness = 1 - EXP(-ntu)
C1*** Calculate effectiveness depending on heat exchanger configuration
      ELSE IF (mode .EQ. 1) THEN
C2*** Counterflow
        IF (ABS(cRatio-1.) .LT. small) THEN
          effectiveness = ntu/(ntu+1.)
        ELSE
          e=EXP(-ntu*(1-cRatio))
          effectiveness = (1-e)/(1-cRatio*e)
        ENDIF
      ELSE IF (mode .EQ. 2) THEN
C2*** Parallel flow
        effectiveness = (1-EXP(-ntu*(1+cRatio)))/(1+cRatio)
      ELSE IF (mode .EQ. 3) THEN
C2*** Cross flow, both streams unmixed
        eta = ntu**(-0.22)
        effectiveness = 1 - EXP((EXP(-ntu*cRatio*eta)-1)/(cRatio*eta))
      ELSE IF (mode .EQ. 4) THEN
```

```
C2*** Cross flow, both streams mixed
        effectiveness = ((1/(1-EXP(-ntu)))+
     &                  (cRatio/(1-EXP(-ntu*cRatio)))-(1/(-ntu)))**(-1)
      ELSE
C2*** One stream is mixed and one is unmixed.  Determine whether the
C2*** minimum or maximum capacity rate stream is mixed.
        IF ( (ABS(Cap1-cMin).LT.small .AND. mode.EQ.5) .OR.
     &       (ABS(Cap2-cMin).LT.small .AND. mode.EQ.6) ) THEN
C2*** Cross flow, stream with minimum capacity rate unmixed
          effectiveness = (1-EXP(-cRatio*(1-EXP(-ntu))))/cRatio
        ELSE
C2*** Cross flow, stream with maximum capacity rate unmixed
          effectiveness = 1-EXP(-(1-EXP(-ntu*cRatio))/cRatio)
        ENDIF
      ENDIF

C1*** Determine leaving conditions for the two streams
      qMax = MAX(cMin,small)*(In1-In2)
      Out1 = In1 - effectiveness*qMax/MAX(Cap1,small)
      Out2 = In2 + effectiveness*qMax/MAX(Cap2,small)

      RETURN
      END

      REAL FUNCTION UAHX (Cap1,In1,Cap2,In2,Q,ConfigHX,ErrStat)
C***********************************************************************
C*    Copyright ASHRAE.  Toolkit for HVAC System Energy Calculations
C***********************************************************************
C*    FUNCTION: UAHX
C*
C*    LANGUAGE: FORTRAN 77
C*
C*    PURPOSE:  Calculate the UA of a heat exchanger
C*              using the effectiveness-Ntu relationships
C*              given the entering capacity rate and
C*              temperature of each flow stream, the
C*              heat transfer rate under these conditions
C*              and the heat exchanger configuration.
C***********************************************************************
C*    INPUT VARIABLES
C*    Cap1          Capacity rate of stream 1                      (W/C)
C*    In1           Inlet state of stream 1                          (C)
C*    Cap2          Capacity rate of stream 2                      (W/C)
C*    In2           Inlet state of stream 2                          (C)
C*    Q             Heat transfer rate                               (W)
C*    ConfigHX      Heat exchanger configuration                     (-)
C*                  1 - Counterflow
C*                  2 - Parallel flow
C*                  3 - Cross flow, both streams unmixed
C*                  4 - Cross flow, both streams mixed
C*                  5 - Cross flow, stream 1 unmixed
C*                  6 - Cross flow, stream 2 unmixed
C*
C*    OUTPUT VARIABLES
C*    UAHX          Overall heat transfer coefficient              (W/C)
C*    ErrStat       Error status indicator, 0 = ok, 1 = error        (-)
C***********************************************************************
C     MAJOR RESTRICTIONS:     Models coil using effectiveness Ntu model
C
C     DEVELOPER:              Michael J. Brandemuehl, PhD, PE
C                             University of Colorado at Boulder
C
C     DATE:                   January 1, 1992
C
C     INCLUDE FILES:          None
C     SUBROUTINES CALLED:     HEATEX
```

```
C     FUNCTIONS CALLED:       XITERATE
C
C     REVISION HISTORY:       CPW20030418
C
C     REFERENCE:              None
C*********************************************************************
C     INTERNAL VARIABLES
C     qEstimate     Estimated heat transfer in iteration            (W)
C     ua            Estimated heat transfer coefficient           (W/C)
C     error         Deviation of dependent variable in iteration
C     icvg          Iteration convergence flag
C     iter          Iteration index
C     itmax         Maximum number of iterations
C     F1,F2         Previous values of error in iteration
C     X1,X2         Previous values of independent variable in iteration
C*********************************************************************
      REAL In1,In2

      INTEGER ErrStat

CPW20030418 Add next line to define I/O units
      COMMON /LUNITS/LUR,LUW,IFORM,LUK

      DATA itmax/20/

      ErrStat = 0

C1*** Check for Q out of range (effectiveness > 1)
      IF(ABS(Q) .GT. ABS(MIN(Cap1,Cap2)*(In1-In2))) THEN
        WRITE(LUW,1001)
 1001   FORMAT(/1X,'*** ERROR IN SUBROUTINE UAHX ***'/
     &          1X,'    Given Q is impossible for given inlet states'/)
        ErrStat = 1
      ENDIF

C1*** Estimate UAHX
      ua = ABS(Q/(In1-In2))

C1*** BEGIN LOOP to iteratively calculate UAHX
      DO 100 iter = 1,itmax
C1*** Calculate heat transfer rate for estimated UAHX
        CALL HEATEX (Cap1,In1,Cap2,In2,ua,ConfigHx,out1,out2)
        qEstimate = Cap1*(In1-out1)
C1*** Calculate new estimate for UAHX
        error = ABS(qEstimate) - ABS(Q)
        ua = XITERATE(ua,error,X1,F1,X2,F2,iter,icvg)
C1*** If converged, leave loop
        IF (icvg .EQ. 1) GO TO 110
  100 CONTINUE

C1*** If not converged after itmax iterations, return error code
      WRITE(LUW,1005) itmax
 1005 FORMAT(/1X,'*** ERROR IN SUBROUTINE UAHX ***'/
     &        1X,'    UA has not converged after',I2,
     &        '  iterations'/)
      ErrStat = 1

  110 CONTINUE

      UAHX = ua

      RETURN
      END

      SUBROUTINE WCOILOUT (Prop,MAir,TAirEnt,WAirEnt,HAirEnt,HAirLvg,
     &                     UAExt,TAirLvg,WAirLvg,QSen,ErrStat)
```

```
C*********************************************************************
C*    Copyright ASHRAE.  Toolkit for HVAC System Energy Calculations
C*********************************************************************
C*    SUBROUTINE: WCOILOUT
C*
C*    LANGUAGE:   FORTRAN 77
C*
C*    PURPOSE:    Calculate the leaving air temperature,
C*                the leaving air humidity ratio and the
C*                sensible cooling capacity of wet cooling
C*                coil.
C*********************************************************************
C*    INPUT VARIABLES
C*    MAir          Dry air mass flow rate                        (kg/s)
C*    TAirEnt       Entering air dry bulb temperature                (C)
C*    WAirEnt       Entering air humidity ratio                      (-)
C*    HAirEnt       Entering air enthalpy                         (J/kg)
C*    HAirLvg       Leaving air enthalpy                          (J/kg)
C*    UAExt         Heat transfer coefficient for external surface (W/C)
C*
C*    OUTPUT VARIABLES
C*    TAirLvg       Leaving air dry bulb temperature                 (C)
C*    WAirLvg       Leaving air humidity ratio                       (-)
C*    Qsen          Sensible heat transfer rate                      (W)
C*    ErrStat       Error status indicator, 0 = ok, 1 = error        (-)
C*
C*    PROPERTIES
C*    Patm          Atmospheric pressure                             (-)
C*    CpAir         Specific heat of air                       (J/kg C)
C*    CpVap         Specific heat of water vapor               (J/kg C)
C*********************************************************************
C     MAJOR RESTRICTIONS:     Assumes condensate at uniform temperature.
C
C     DEVELOPER:              Shauna Gabel
C                             Michael J. Brandemuehl, PhD, PE
C                             University of Colorado at Boulder
C
C     DATE:                   January 1, 1992
C
C     INCLUDE FILES:          prop.inc
C     SUBROUTINES CALLED:     None
C     FUNCTIONS CALLED:       TAIRSAT
C                             DRYBULB3
C                             HUMTH
C                             DEWPOINT
C
C     REVISION HISTORY:       None
C
C     REFERENCE:              Elmahdy, A.H. and Mitalas, G.P.  1977.
C                             "A Simple Model for Cooling and
C                             Dehumidifying Coils for Use In Calculating
C                             Energy Requirements for Buildings,"
C                             ASHRAE Transactions,Vol.83 Part 2,
C                             pp. 103-117.
C*********************************************************************
C     INTERNAL VARIABLES:
C     capAir        Air capacity rate                             (W/C)
C     ntu           Number of heat transfer units                    (-)
C     effectiveness Heat exchanger effectiveness                     (-)
C     hCondSat      Saturated air enthalpy at temperature of
C                   condensate                                    (J/kg)
C     tempCond      Temperature of condensate                        (C)
C*********************************************************************
      REAL Prop(16)

      PARAMETER (Patm     = 1)
```

```
      PARAMETER (CpAir    = 2)
      PARAMETER (CpWat    = 3)
      PARAMETER (CpVap    = 4)
      PARAMETER (CpLiq    = 5)
      PARAMETER (DViscAir = 6)
      PARAMETER (DViscLiq = 7)
      PARAMETER (KAir     = 8)
      PARAMETER (KLiq     = 9)
      PARAMETER (RhoLiq   = 10)
      PARAMETER (Hfg      = 11)
      PARAMETER (RAir     = 12)
      PARAMETER (TKelMult = 13)
      PARAMETER (TAbsAdd  = 14)
      PARAMETER (PaMult   = 15)
      PARAMETER (PAbsAdd  = 16)

      INTEGER ErrStat

      REAL ntu,MAir

      DATA small/1.E-9/

      ErrStat = 0

C1*** Determine the temperature effectiveness, assuming the temperature
C1*** of the condensate is constant (Cmin/Cmax = 0) and the specific heat
C1*** of moist air is constant
      capAir = MAir*(Prop(CpAir)+WAirEnt*Prop(CpVap))
      ntu = UAExt/MAX(capAir,small)
      effectiveness = 1 - EXP(-ntu)

C1*** Calculate coil surface enthalpy and temperature at the exit
C1*** of the wet part of the coil using the effectiveness relation
      effectiveness = MAX(effectiveness,small)
      hCondSat = HAirEnt-(HAirEnt-HAirLvg)/effectiveness

C1*** Calculate condensate temperature as the saturation temperature
C1*** at given saturation enthalpy
      tempCond = TAIRSAT(Prop,hCondSat)

C1*** Calculate exit air conditions and sensible heat transfer
      IF (tempCond .LT. DEWPOINT(Prop,WAirEnt)) THEN
        TAirLvg = TAirEnt-(TAirEnt-tempCond)*effectiveness
        WAirLvg = HUMTH(Prop,TAirLvg,HAirLvg)
      ELSE
        WAirLvg = WAirEnt
        TAirLvg = DRYBULB3(Prop,HAirLvg,WAirLvg)
      ENDIF

      Qsen = capAir*(TAirEnt-TAirLvg)

      RETURN
      END

      SUBROUTINE BYPASS(Prop,TEnt,WEnt,TLvg,WLvg,
     &                  TAdp,WAdp,BF,ErrStat)
C*********************************************************************
C*    Copyright ASHRAE.  Toolkit for HVAC System Energy Calculations
C**********************************************************************
C*    SUBROUTINE: BYPASS
C*
C*    LANGUAGE:   FORTRAN 77
C*
C*    PURPOSE:    Calculate apparatus dew point and bypass
C*                factor given entering and leaving moist
C*                air conditions of cooling coil.
```

```
C*********************************************************************
C*    INPUT VARIABLES
C*    TEnt          Entering air temperature                        (C)
C*    WEnt          Entering air humidity ratio                     (-)
C*    TLvg          Leaving air temperature                         (C)
C*    WLvg          Leaving air humidity ratio                      (-)
C*
C*    OUTPUT VARIABLES
C*    TAdp          Apparatus dewpoint temperature                  (C)
C*    WAdp          Apparatus dewpoint humidity ratio               (-)
C*    BF            Bypass factor                                   (-)
C*    ErrStat       Error status indicator, 0 = ok, 1 = error       (-)
C*********************************************************************
C     MAJOR RESTRICTIONS:     None
C
C     DEVELOPER:              Michael J. Brandemuehl, PhD, PE
C                             University of Colorado at Boulder
C
C                             Hugh Henderson & Kannan Rengarajan
C                             Florida Solar Energy Center
C
C     DATE:                   January 1, 1992
C
C     INCLUDE FILES:          prop.inc
C     SUBROUTINES CALLED:     None
C     FUNCTIONS CALLED:       DEWPOINT
C                             ENTHALPY3
C                             HUMRATIO
C                             SATPRESS
C                             XITERATE
C
C     REVISION HISTORY:       CPW20030418
C
C     REFERENCE:              1989 ASHRAE Handbook - Fundamentals
C*********************************************************************
C     INTERNAL VARIABLES:
C     hEnt          Entering air enthalpy
C     hLvg          Leaving air enthalpy
C     hAdp          Air enthalpy at apparatus dew point
C     slope         Ratio temperature difference to humidity difference
C                   between entering and leaving air states
C     tAdpEst       Estimate of TAdp from slope
C     error         Deviation of dependent variable in iteration
C     iter          Iteration counter
C     icvg          Iteration convergence flag
C     F1,F2         Previous values of dependent variable in XITERATE
C     X1,X2         Previous values of independent variable in XITERATE
C*********************************************************************
      INTEGER Patm,CpAir,CpWat,CpLiq,CpVap,DViscAir,
     &        DViscLiq,KAir,KLiq,RhoLiq,Hfg,RAir,
     &        TKelMult,TAbsAdd,PaMult,PAbsAdd,ERRSTAT

      REAL Prop(16)

CPW20030418 Add next line to define I/O units
      COMMON /LUNITS/LUR,LUW,IFORM,LUK

      PARAMETER (Patm     = 1)
      PARAMETER (CpAir    = 2)
      PARAMETER (CpWat    = 3)
      PARAMETER (CpVap    = 4)
      PARAMETER (CpLiq    = 5)
      PARAMETER (DViscAir = 6)
      PARAMETER (DViscLiq = 7)
      PARAMETER (KAir     = 8)
      PARAMETER (KLiq     = 9)
```

```
      PARAMETER (RhoLiq   = 10)
      PARAMETER (Hfg      = 11)
      PARAMETER (RAir     = 12)
      PARAMETER (TKelMult = 13)
      PARAMETER (TAbsAdd  = 14)
      PARAMETER (PaMult   = 15)
      PARAMETER (PAbsAdd  = 16)

      DATA itmax/20/

C1*** Iterate to determine apparatus dewpoint at which the ADP
C1*** equals the temperature calculated by extending the line between
C1*** entering and leaving conditions to the saturation curve

C1*** Calculate "slope" of temperature vs. humidity ratio between
C1*** entering and leaving states
      slope = (TEnt-TLvg)/(WEnt-WLvg)

C1*** Initialize iteration parameters
      TAdp = DEWPOINT(Prop,WLvg)

      DO 100 iter=1,itmax
C1*** Calculate apparatus dewpoint and compare with predicted value
C1*** using entering conditions and slope
        WAdp = HUMRATIO(Prop(Patm),SATPRESS(Prop,TAdp))
        TAdpEst = TEnt - slope*(WEnt-WAdp)
        error = TAdp-TAdpEst
        TAdp = XITERATE(TAdp,error,X1,F1,X2,F2,iter,icvg)
C1*** If converged, exit loop
        IF (icvg .EQ. 1) GO TO 110
  100 CONTINUE

C1*** Apparatus dewpoint has not converged after maximum iterations.
C1*** Print error message, set return error flag, and RETURN
      WRITE(LUW,1001) itmax
 1001 FORMAT(/1X,'*** ERROR IN SUBOUTINE BYPASS ***'/
     &        1X,'    Apparatus dewpoint has not '
     &           'converged after ',I2,' iterations'/)
      ErrStat = 1

  110 CONTINUE

C1*** Calculate bypass factor from enthalpies
      hLvg = ENTHALPY3(Prop,TLvg,WLvg)
      hEnt = ENTHALPY3(Prop,TEnt,WEnt)
      hAdp = ENTHALPY3(Prop,TAdp,WAdp)
      BF = (hLvg-hAdp)/(hEnt-hAdp)

999   RETURN
      END

      REAL FUNCTION ENTHALPY3 (Prop,TDB,W)
C*********************************************************************
C*    Copyright ASHRAE.  Toolkit for HVAC System Energy Calculations
C*********************************************************************
C*    FUNCTION: ENTHALPY3
C*
C*    LANGUAGE: FORTRAN 77
C*
C*    PURPOSE:  Calculate the enthalpy of moist air.
C*********************************************************************
C*    INPUT VARIABLES:
C*    TDB           Dry bulb temperature                            (C)
C*    W             Humidity ratio                                  (-)
C*
C*    OUTPUT VARIABLES:
```

```
C*    Enthalpy      Enthalpy of moist air                        (J/kg)
C*
C*    PROPERTIES:
C*    CpAir         Specific heat of air                       (J/kg C)
C*    CpVap         Specific heat of water vapor               (J/kg C)
C*    Hfg           Reference heat of vaporization of water       (J/kg)
C*********************************************************************
C     MAJOR RESTRICTIONS      Uses perfect gas relationships
C                             Fit for enthalpy of saturated water vapor
C
C     DEVELOPER:              Shauna Gabel
C                             Michael J. Brandemuehl, PhD, PE
C                             University of Colorado at Boulder
C
C     DATE:                   January 1, 1992
C
C     INCLUDE FILES:          PROP.INC
C     SUBROUTINES CALLED:     None
C     FUNCTIONS CALLED:       None
C
C     REVISION HISTORY:       None
C
C     REFERENCE:              1989 ASHRAE Handbook - Fundamentals
C*********************************************************************
      INTEGER Patm,CpAir,CpWat,CpLiq,CpVap,DViscAir,
     &        DViscLiq,KAir,KLiq,RhoLiq,Hfg,RAir,
     &        TKelMult,TAbsAdd,PaMult,PAbsAdd

      REAL Prop(16)

      PARAMETER (Patm     = 1)
      PARAMETER (CpAir    = 2)
      PARAMETER (CpWat    = 3)
      PARAMETER (CpVap    = 4)
      PARAMETER (CpLiq    = 5)
      PARAMETER (DViscAir = 6)
      PARAMETER (DViscLiq = 7)
      PARAMETER (KAir     = 8)
      PARAMETER (KLiq     = 9)
      PARAMETER (RhoLiq   = 10)
      PARAMETER (Hfg      = 11)
      PARAMETER (RAir     = 12)
      PARAMETER (TKelMult = 13)
      PARAMETER (TAbsAdd  = 14)
      PARAMETER (PaMult   = 15)
      PARAMETER (PAbsAdd  = 16)

C1*** Calculate the enthalpy as a function of dry bulb temperature and
C1*** humidity ratio.
      hDryAir = Prop(CpAir)*TDB
      hSatVap = Prop(Hfg) + Prop(CpVap)*TDB
      Enthalpy3 = hDryAir + W*hSatVap

      RETURN
      END

      REAL FUNCTION DEWPOINT (Prop,W)
C*********************************************************************
C*    Copyright ASHRAE.  Toolkit for HVAC System Energy Calculations
C*********************************************************************
C*    FUNCTION: DEWPOINT
C*
C*    LANGUAGE: FORTRAN 77
C*
C*    PURPOSE:  Calculate the dewpoint temperature given
C*              humidity ratio
```

```
C*********************************************************************
C*    INPUT VARIABLES
C*    W             Humidity ratio                                  (-)
C*
C*    OUTPUT VARIABLES
C*    DewPoint      Dew point temperature of air                    (C)
C*
C*    PROPERTIES
C*    Patm          Atmospheric pressure                           (Pa)
C*********************************************************************
C     MAJOR RESTRICTIONS:     None
C
C     DEVELOPER:              Michael J. Brandemuehl, PhD, PE
C                             University of Colorado at Boulder
C
C     DATE:                   January 1, 1992
C
C     INCLUDE FILES:          None
C     SUBROUTINES CALLED:     None
C     FUNCTIONS CALLED:       None
C
C     REVISION HISTORY:       None
C
C     REFERENCE:              1989 ASHRAE Handbook - Fundamentals
C*********************************************************************
C     INTERNAL VARIABLES:
C     pw            Partial water vapor pressure                   (Pa)
C     small         Small number
C*********************************************************************
      INTEGER Patm,CpAir,CpWat,CpLiq,CpVap,DViscAir,
     &        DViscLiq,KAir,KLiq,RhoLiq,Hfg,RAir,
     &        TKelMult,TAbsAdd,PaMult,PAbsAdd

      REAL Prop(16)

      PARAMETER (Patm     = 1)
      PARAMETER (CpAir    = 2)
      PARAMETER (CpWat    = 3)
      PARAMETER (CpVap    = 4)
      PARAMETER (CpLiq    = 5)
      PARAMETER (DViscAir = 6)
      PARAMETER (DViscLiq = 7)
      PARAMETER (KAir     = 8)
      PARAMETER (KLiq     = 9)
      PARAMETER (RhoLiq   = 10)
      PARAMETER (Hfg      = 11)
      PARAMETER (RAir     = 12)
      PARAMETER (TKelMult = 13)
      PARAMETER (TAbsAdd  = 14)
      PARAMETER (PaMult   = 15)
      PARAMETER (PAbsAdd  = 16)

      DATA small/1.E-9/

C1*** Test for "dry" air
      IF (W .LT. small) THEN
        DewPoint = -999
      ELSE
C1*** Calculate the partial water vapor pressure as a function of
C1*** humidity ratio.
        pw= Prop(Patm)*W/(.62198+W)
C1*** Calculate dewpoint as saturation temperature at water vapor
C1*** partial pressure
        DewPoint = SATTEMP(Prop,pw)
      ENDIF
```

```
  999 RETURN
      END

      REAL FUNCTION ENTHSAT (Prop,TDB)
C*********************************************************************
C*    Copyright ASHRAE.  Toolkit for HVAC System Energy Calculations
C*********************************************************************
C*    FUNCTION: ENTHSAT
C*
C*    LANGUAGE: FORTRAN 77
C*
C*    PURPOSE:  Calculate the enthalpy at saturation
C*              for given dry bulb temperature
C*********************************************************************
C*    INPUT VARIABLES
C*    TDB           Dry bulb temperature                            (C)
C*
C*    OUTPUT VARIABLES
C*    EnthSat       Enthalpy at saturation                       (J/kg)
C*
C*    PROPERTIES
C*    Patm          Atmospheric pressure                           (Pa)
C*********************************************************************
C     MAJOR RESTRICTIONS:     None
C
C     DEVELOPER:              Shauna Gabel
C                             Michael J. Brandemuehl, PhD, PE
C                             University of Colorado at Boulder
C
C     DATE:                   January 1, 1992
C
C     INCLUDE FILES:          PROP.INC
C     SUBROUTINES CALLED:     None
C     FUNCTIONS CALLED:       SATPRESS
C                             HUMRATIO
C                             ENTHALPY3
C
C     REVISION HISTORY:       None
C
C     REFERENCE:              1989 ASHRAE Handbook - Fundamentals
C*********************************************************************
C     INTERNAL VARIABLES:
C     psat          Saturated water vapor pressure                 (Pa)
C     w             Humidity ratio                                  (-)
C*********************************************************************
      INTEGER Patm,CpAir,CpWat,CpLiq,CpVap,DViscAir,
     &        DViscLiq,KAir,KLiq,RhoLiq,Hfg,RAir,
     &        TKelMult,TAbsAdd,PaMult,PAbsAdd

      REAL Prop(16)

      PARAMETER (Patm     = 1)
      PARAMETER (CpAir    = 2)
      PARAMETER (CpWat    = 3)
      PARAMETER (CpVap    = 4)
      PARAMETER (CpLiq    = 5)
      PARAMETER (DViscAir = 6)
      PARAMETER (DViscLiq = 7)
      PARAMETER (KAir     = 8)
      PARAMETER (KLiq     = 9)
      PARAMETER (RhoLiq   = 10)
      PARAMETER (Hfg      = 11)
      PARAMETER (RAir     = 12)
      PARAMETER (TKelMult = 13)
      PARAMETER (TAbsAdd  = 14)
      PARAMETER (PaMult   = 15)
```

```
      PARAMETER (PAbsAdd  = 16)

C1*** Calculate the saturation pressure at the given temperature.
      psat = SATPRESS (Prop,TDB)

C1*** Calculate the humidity ratio from the saturation pressure
      w = HUMRATIO (Prop(Patm),psat)

C1*** Calculate the enthalpy as a function of dry bulb temperature
C1*** and humidity ratio.
      ENTHSAT = ENTHALPY3 (Prop,TDB,w)

      RETURN
      END

      REAL FUNCTION HUMRATIO (Patm,Pw)
C*********************************************************************
C*    Copyright ASHRAE.  Toolkit for HVAC System Energy Calculations
C*********************************************************************
C*    FUNCTION: HUMRATIO
C*
C*    LANGUAGE: FORTRAN 77
C*
C*    PURPOSE:  Calculate the humidity ratio from water
C*              vapor pressure and atmospheric pressure
C*********************************************************************
C*    INPUT VARIABLES
C*    Patm          Atmospheric pressure                          (Pa)
C*    Pw            Partial water vapor pressure                  (Pa)
C*
C*    OUTPUT VARIABLES
C*    HumRatio      Humidity ratio                                 (-)
C*********************************************************************
C     MAJOR RESRICTIONS:      None
C
C     DEVELOPER:              Shauna Gabel
C                             Michael J. Brandemuehl, PhD, PE
C                             University of Colorado at Boulder
C
C     DATE:                   January 1, 1992
C
C     INCLUDE FILES:          None
C     SUBROUTINES CALLED:     None
C     FUNCTIONS CALLED:       None
C
C     REVISION HISTORY:       None
C
C     REFERENCE:              1989 ASHRAE Handbook - Fundamentals
C**********************************************************************

C1*** Calculate the humidity ratio.
      HumRatio = 0.62198*Pw/(Patm-Pw)

      RETURN
      END

      REAL FUNCTION HUMTH (Prop,TDB,H)
C*********************************************************************
C*    Copyright ASHRAE.  Toolkit for HVAC System Energy Calculations
C*********************************************************************
C*    FUNCTION: HUMTH
C*
C*    LANGUAGE: FORTRAN 77
C*
C*    PURPOSE:  Calculate the humidity ratio of moist air
C*              from dry bulb temperature and enthalpy.
```

```
C*********************************************************************
C*    INPUT VARIABLES:
C*    H             Enthalpy                                    (J/kg)
C*    TDB           Dry bulb temperature                           (C)
C*
C*    OUTPUT VARIABLES:
C*    HumTH         Humidity ratio                                  (-)
C*
C*    PROPERTIES:
C*    CpAir         Specific heat of air                       (J/kg C)
C*    CpVap         Specific heat of water vapor               (J/kg C)
C*    Hfg           Reference heat of vaporization of water       (J/kg)
C*********************************************************************
C     MAJOR RESTRICTIONS:     Uses perfect gas relationships
C                             Fit for enthalpy of saturated water vapor
C
C     DEVELOPER:              Shauna Gabel
C                             Michael J. Brandemuehl, PhD, PE
C                             University of Colorado at Boulder
C
C     DATE:                   January 1, 1992
C
C     INCLUDE FILES:          prop.inc
C     SUBROUTINES CALLED:     None
C     FUNCTIONS CALLED:       None
C
C     REVISION HISTORY:       None
C
C     REFERENCE:              1989 ASHRAE Handbook - Fundamentals
C*********************************************************************
      INTEGER Patm,CpAir,CpWat,CpLiq,CpVap,DViscAir,
     &        DViscLiq,KAir,KLiq,RhoLiq,Hfg,RAir,
     &        TKelMult,TAbsAdd,PaMult,PAbsAdd

      REAL Prop(16)

      PARAMETER (Patm     = 1)
      PARAMETER (CpAir    = 2)
      PARAMETER (CpWat    = 3)
      PARAMETER (CpVap    = 4)
      PARAMETER (CpLiq    = 5)
      PARAMETER (DViscAir = 6)
      PARAMETER (DViscLiq = 7)
      PARAMETER (KAir     = 8)
      PARAMETER (KLiq     = 9)
      PARAMETER (RhoLiq   = 10)
      PARAMETER (Hfg      = 11)
      PARAMETER (RAir     = 12)
      PARAMETER (TKelMult = 13)
      PARAMETER (TAbsAdd  = 14)
      PARAMETER (PaMult   = 15)
      PARAMETER (PAbsAdd  = 16)

C1*** Calculate humidity ratio from dry bulb temperature and enthalpy
C2*** hDryAir = Prop(CpAir)*TDB
C2*** hSatVap = Prop(Hfg) + Prop(CpVap)*TDB
C2*** Enthalpy = hDryAir + W*hSatVap
      HumTH = (H-Prop(CpAir)*TDB)/(Prop(Hfg)+Prop(CpVap)*TDB)

      RETURN
      END

      REAL FUNCTION RELHUM (Patm,Psat,HumRatio)
C*********************************************************************
C*    Copyright ASHRAE.  Toolkit for HVAC System Energy Calculations
C*********************************************************************
```

```
C*    FUNCTION: RELHUM
C*
C*    LANGUAGE: FORTRAN 77
C*
C*    PURPOSE:  Calculate the relative humidity from
C*              saturation and atmospheric pressures
C*********************************************************************
C*    INPUT VARIABLES
C*    Patm          Atmospheric pressure                          (Pa)
C*    Psat          Saturation pressure                           (Pa)
C*    HumRatio      Humidity ratio                                 (-)
C*
C*    OUTPUT VARIABLES
C*    RelHum        Relative humidity                              (-)
C******      ****************************************************************
C     MAJOR RESTRICTIONS:     None
C
C     DEVELOPER:              Shauna Gabel
C                             Michael J. Brandemuehl, PhD, PE
C                             University of Colorado at Boulder
C
C     DATE:                   January 1, 1992
C
C     INCLUDE FILES:          None
C     SUBROUTINES CALLED:     None
C     FUNCTIONS CALLED:       None
C
C     REVISION HISTORY:       None
C
C     REFERENCE:              1989 ASHRAE Handbook - Fundamentals
C*********************************************************************
C     INTERNAL VARIABLES:
C     pw            Partial water vapor pressure                  (Pa)
C*********************************************************************

C1*** Calculate the partial water vapor pressure as a function of
C1*** humidity ratio.
      pw = Patm*HumRatio/(.62198+HumRatio)

C1*** Calculate the relative humidity as a function of partial water
C1*** vapor pressure and water vapor pressure at saturation.
      RelHum = pw/Psat

      RETURN
      END

      REAL FUNCTION RHOMOIST (RhoDry,W)
C*********************************************************************
C*    Copyright ASHRAE.  Toolkit for HVAC System Energy Calculations
C*********************************************************************
C*    FUNCTION: RHOMOIST
C*
C*    LANGUAGE: FORTRAN 77
C*
C*    PURPOSE:  Calculate moist air density from dry air
C*              density and humidity ratio
C*********************************************************************
C*    INPUT VARIABLES:
C*    RhoDry                  Dry air density                   (kg/m3)
C*    W                       Humidity ratio                        (-)
C*
C*    OUTPUT VARIABLES:
C*    RhoMoist                Density of dry air                (kg/m3)
C*********************************************************************
C     MAJOR RESTRICTIONS:     None
C
```

```
C     DEVELOPER:              Shauna Gabel
C                             Michael J. Brandemuehl, PhD, PE
C                             University of Colorado at Boulder
C
C     DATE:                   January 1, 1992
C
C     INCLUDE FILES:          None
C     SUBROUTINES CALLED:     None
C     FUNCTIONS CALLED:       None
C
C     REVISION HISTORY:       None
C
C     REFERENCE:              1989 ASHRAE Handbook - Fundamentals
C***********************************************************************

C1*** Calculate the moist air density
      RhoMoist = RhoDry*(1.+W)

      RETURN
      END

      REAL FUNCTION SATPRESS (Prop,T)
C*********************************************************************
C*    Copyright ASHRAE.  Toolkit for HVAC System Energy Calculations
C*********************************************************************
C*    SUBROUTINE: SATPRESS
C*
C*    LANGUAGE:   FORTRAN 77
C*
C*    PURPOSE:    Calculate saturation pressure of water
C*                vapor as a function of temperature
C*********************************************************************
C*    INPUT VARIABLES
C*    T             Temperature                                    (C)
C*
C*    OUTPUT VARIABLES
C*    SatPress      Saturation pressure                           (Pa)
C*
C*    PROPERTIES
C*    TKelMult      Multiplying factor to convert user T to Kelvin
C*    TAbsAdd       Additive factor to convert user T to absolute T
C*                  tKel = Prop(TKelMult) * (T + Prop(TAbsAdd))
C*    PaMult        Multiplying factor to convert user P to Pascals
C*    PAbsAdd       Additive factor to convert user P to absolute P
C*                  Pa = Prop(PaMult) * (P + Prop(PAbsAdd))
C*********************************************************************
C     MAJOR RESTRICTIONS:     173.16 K <= Temp <= 473.15 K
C
C     DEVELOPER:              Shauna Gabel
C                             Michael J. Brandemuehl, PhD, PE
C                             University of Colorado at Boulder
C
C     DATE:                   January 1, 1992
C
C     INCLUDE FILES:          prop.inc
C     SUBROUTINES CALLED:     None
C     FUNCTIONS CALLED:       None
C
C     REVISION HISTORY:       None
C
C     REFERENCE:              1989 ASHRAE Handbook - Fundamentals
C
C                             Hyland, R.W., and A. Wexler.  1983.
C                             Formulations for the thermodynamic
C                             properties of the saturated phases of H2O
C                             from 173.15 K to 473.15 K.  ASHRAE
```

```
C                             Transactions, Vol. 89, No. 2A, pp. 500-519
C***********************************************************************
C     INTERNAL VARIABLES:
C     tKel          Temperature in Kelvin                            (K)
C     pascals       Saturation pressure                             (Pa)
C***********************************************************************
      INTEGER Patm,CpAir,CpWat,CpLiq,CpVap,DViscAir,
     &        DViscLiq,KAir,KLiq,RhoLiq,Hfg,RAir,
     &        TKelMult,TAbsAdd,PaMult,PAbsAdd

      REAL Prop(16)

      PARAMETER (Patm     = 1)
      PARAMETER (CpAir    = 2)
      PARAMETER (CpWat    = 3)
      PARAMETER (CpVap    = 4)
      PARAMETER (CpLiq    = 5)
      PARAMETER (DViscAir = 6)
      PARAMETER (DViscLiq = 7)
      PARAMETER (KAir     = 8)
      PARAMETER (KLiq     = 9)
      PARAMETER (RhoLiq   = 10)
      PARAMETER (Hfg      = 11)
      PARAMETER (RAir     = 12)
      PARAMETER (TKelMult = 13)
      PARAMETER (TAbsAdd  = 14)
      PARAMETER (PaMult   = 15)
      PARAMETER (PAbsAdd  = 16)

      DATA C1/-5674.5359/,C2/6.3925247/,C3/-0.9677843E-2/
      DATA C4/0.62215701E-6/,C5/0.20747825E-8/,C6/-0.9484024E-12/
      DATA C7/4.1635019/,C8/-5800.2206/,C9/1.3914993/,C10/-0.048640239/
      DATA C11/0.41764768E-4/,C12/-0.14452093E-7/,C13/6.5459673/

C1*** Convert temperature from user units to Kelvin.
      tKel = Prop(TKelMult)*(T+Prop(TAbsAdd))

C1*** If below freezing, calculate saturation pressure over ice.
      IF (tKel .LT. 273.15) THEN
        pascals = EXP(C1/tKel+C2+C3*tKel+C4*tKel**2+C5*tKel**3+C6*
     &                tKel**4+C7*ALOG(tKel))
C1*** If above freezing, calculate saturation pressure over liquid water.
      ELSE IF (tKel .GE. 273.15) THEN
        pascals = EXP(C8/tKel+C9+C10*tKel+C11*tKel**2+C12*tKel**3+C13
     &                *ALOG(tKel))
      ENDIF

C1*** Convert pressure from Pascals to user units
      SatPress = pascals/Prop(PaMult) - Prop(PAbsAdd)

      RETURN
      END

      REAL FUNCTION SATTEMP (Prop,P)
C***********************************************************************
C*    Copyright ASHRAE.  Toolkit for HVAC System Energy Calculations
C***********************************************************************
C*    FUNCTION: SATTEMP
C*
C*    LANGUAGE: FORTRAN 77
C*
C*    PURPOSE:  Calculate the saturation (boiling)
C*              temperature of water given pressure
C***********************************************************************
C*    INPUT VARIABLES
C*    P             Pressure                                        (Pa)
```

```
C*
C*    OUTPUT VARIABLES
C*    SatTemp       Saturation temperature of water vapor            (C)
C*********************************************************************
C     MAJOR RESTRICTIONS:     None
C
C     DEVELOPER:              Shauna Gabel
C                             Michael J. Brandemuehl, PhD, PE
C                             University of Colorado at Boulder
C
C     DATE:                   January 1, 1992
C
C     INCLUDE FILES:          prop.inc
C     SUBROUTINES CALLED:     None
C     FUNCTIONS CALLED:       SATPRESS
C                             XITERATE
C
C     REVISION HISTORY:       CPW20030418
C
C     REFERENCE:              1989 ASHRAE Handbook - Fundamentals
C*********************************************************************
C     INTERNAL VARIABLES:
C     tSat          Water temperature guess                          (C)
C     pSat          Pressure corresponding to temp. guess           (Pa)
C     error         Deviation of dependent variable in iteration
C     iter          Iteration counter
C     icvg          Iteration convergence flag
C     F1,F2         Previous values of dependent variable in XITERATE
C     X1,X2         Previous values of independent variable in XITERATE
C*********************************************************************
CPW20030418 Add next line to define I/O units
      COMMON /LUNITS/LUR,LUW,IFORM,LUK

      DATA itmax/50/

C1*** Use an iterative process to determine the saturation temperature
C1*** at a given pressure using a correlation of saturated water vapor
C1*** pressure as a function of temperature

C1*** Initial guess of boiling temperature
      tSat = 100.

C1*** Iterate to find the saturation temperature
C1*** of water given the total pressure

C2*** Set iteration loop parameters
      DO 100 iter = 1,itmax
C1*** Calculate saturation pressure for estimated boiling temperature
        pSat = SATPRESS(Prop,tSat)
C1*** Compare with specified pressure and update estimate of temperature
        error = P - pSat
        tSat = XITERATE (tSat,error,X1,F1,X2,F2,iter,icvg)
C2*** If converged leave loop iteration
        IF (icvg .EQ. 1) GO TO 110
C2*** Water temperature not converged, repeat calculations with new
C2*** estimate of water temperature
  100 CONTINUE

C1*** Saturation temperature has not converged after maximum specified
C1*** iterations. Print error message, set return error flag, and RETURN
      WRITE(LUW,1001) itmax
 1001 FORMAT(/1X,'*** ERROR IN FUNCTION SatTemp ***'/
     &        1X,'    Saturation temperature has not '
     &           'converged after ',I2,' iterations'/)

  110 SatTemp = tSat
```

```
      RETURN
      END

      REAL FUNCTION TAIRSAT (Prop,HSat)
C*********************************************************************
C*    Copyright ASHRAE.  Toolkit for HVAC System Energy Calculations
C*********************************************************************
C*    FUNCTION: ENTHSAT
C*
C*    LANGUAGE: FORTRAN 77
C*
C*    PURPOSE:  Calculate the dry bulb temperature given
C*              enthalpy at saturation.
C*********************************************************************
C*    INPUT VARIABLES:
C*    HSat          Enthalpy at saturation                       (J/kg)
C*
C*    OUTPUT VARIABLES:
C*    TAirSat       Dry bulb temperature                            (C)
C*********************************************************************
C     MAJOR RESTRICTIONS:     None
C
C     DEVELOPER:              Michael J. Brandemuehl, PhD, PE
C                             University of Colorado at Boulder
C
C     DATE:                   January 1, 1992
C
C     INCLUDE FILES:          prop.inc
C     SUBROUTINES CALLED:     None
C     FUNCTIONS CALLED:       ENTHSAT
C
C     REVISION HISTORY:       CPW20030418
C
C     REFERENCE:              1989 ASHRAE Handbook - Fundamentals
C*********************************************************************
C     INTERNAL VARIABLES:
C     error         Deviation of dependent variable in iteration
C     iter          Iteration counter
C     icvg          Iteration convergence flag
C     F1,F2         Previous values of dependent variable in XITERATE
C     X1,X2         Previous values of independent variable in XITERATE
C*********************************************************************

CPW20030418 Add next line to define I/O units
      COMMON /LUNITS/LUR,LUW,IFORM,LUK

      DATA itmax/20/,tSat/50./

C1*** Estimate saturation temperature if reasonable value not available
      IF(tSat .LT. -200. .OR. tSat .GT. 1000.) tSat = 50.

C1*** Calculate saturation temperature by iteration using function to
C1*** calculate saturation enthalpy from temperature
      DO 100 iter=1,itmax
        error = HSat - ENTHSAT(Prop,tSat)
        tSat = XITERATE(tSat,error,X1,F1,X2,F2,iter,icvg)
C1*** If converged, leave iteration loop.
        IF (icvg .EQ. 1) GO TO 110
C1*** Temperature not converged, repeat calculation with new
C1*** estimate of temperature.
  100 CONTINUE

C1*** Temperature has not converged after maximum specified
C1*** iterations. Print error message and RETURN
      WRITE(LUW,1001) itmax
```

```
 1001 FORMAT(/1X,'*** ERROR IN FUNCTION TAIRSAT ***'/
     &        1X,'    Temperature has not '
     &           'converged after ',I2,' iterations'/)

  110 CONTINUE

      TAirSat = tSat

      RETURN
      END


       REAL FUNCTION WETBULB (Prop,TDB,W)
C*********************************************************************
C*    Copyright ASHRAE.  Toolkit for HVAC System Energy Calculations
C*********************************************************************
C*    FUNCTION: WETBULB
C*
C*    LANGUAGE: FORTRAN 77
C*
C*    PURPOSE:  Calculate wet bulb temperature from dry
C*              bulb temperature and humidity ratio
C*********************************************************************
C*    INPUT VARIABLES
C*    TDB           Dry bulb temperature                            (C)
C*    W             Humidity ratio of air                           (-)
C*
C*    OUTPUT VARIABLES
C*    WetBulb       Wet bulb temperature                            (C)
C*
C*    PROPERTIES:
C*    Patm          Atmospheric pressure                           (Pa)
C*    Hfg           Latent heat of vaporization of water         (J/kg)
C*    CpAir         Specific heat of air                       (J/kg C)
C*    CpVap         Specific heat of water vapor               (J/kg C)
C*    CpWat         Specific heat of water                     (J/kg C)
C*********************************************************************
C     MAJOR RESTRICTIONS:     None
C
C     DEVELOPER:              Shauna Gabel
C                             Michael J. Brandemuehl, PhD, PE
C                             University of Colorado at Boulder
C
C     DATE:                   January 1, 1992
C
C     INCLUDE FILES:          prop.inc
C     SUBROUTINES CALLED:     None
C     FUNCTIONS CALLED:       SATPRESS
C                             HUMRATIO
C                             SATTEMP
C                             XITERATE
C
C     REVISION HISTORY:       CPW20030418
C
C     REFERENCE:              1989 ASHRAE Handbook - Fundamentals
C*********************************************************************
C     INTERNAL VARIABLES:
C     tBoil         Boiling temperature of water at given pressure   (C)
C     psatStar      Saturation pressure at wet bulb temperature      (C)
C     wStar         Humidity  ratio as a function of PsatStar        (-)
C     newW          Humidity ratio calculated with wet bulb guess    (-)
C     error         Deviation of dependent variable in iteration
C     iter          Iteration counter
C     icvg          Iteration convergence flag
C     F1,F2         Previous values of dependent variable in XITERATE
C     X1,X2         Previous values of independent variable in XITERATE
```

```
C*********************************************************************
      INTEGER Patm,CpAir,CpWat,CpLiq,CpVap,DViscAir,
     &        DViscLiq,KAir,KLiq,RhoLiq,Hfg,RAir,
     &        TKelMult,TAbsAdd,PaMult,PAbsAdd

      REAL Prop(16)

      PARAMETER (Patm     = 1)
      PARAMETER (CpAir    = 2)
      PARAMETER (CpWat    = 3)
      PARAMETER (CpVap    = 4)
      PARAMETER (CpLiq    = 5)
      PARAMETER (DViscAir = 6)
      PARAMETER (DViscLiq = 7)
      PARAMETER (KAir     = 8)
      PARAMETER (KLiq     = 9)
      PARAMETER (RhoLiq   = 10)
      PARAMETER (Hfg      = 11)
      PARAMETER (RAir     = 12)
      PARAMETER (TKelMult = 13)
      PARAMETER (TAbsAdd  = 14)
      PARAMETER (PaMult   = 15)
      PARAMETER (PAbsAdd  = 16)

      REAL newW

CPW20030418 Add next line to define I/O units
      COMMON /LUNITS/LUR,LUW,IFORM,LUK

      DATA itmax/20/

C1*** Initial temperature guess
      tBoil = SATTEMP (Prop,Prop(Patm))
      WetBulb = MAX( MIN(WetBulb,TDB,(tBoil-0.1)), 0.)

C1*** Begin iteration loop
      DO 100 iter = 1,itmax
        IF (WetBulb .GE. (tBoil-0.09) ) WETBULB = tBoil-0.1
C1*** Determine the saturation pressure for wet bulb temperature
        psatStar = SATPRESS (Prop,WetBulb)
C1*** Determine humidity ratio for given saturation pressure
        wStar = HUMRATIO (Prop(Patm),psatStar)
C1*** Calculate new humidity ratio and determine difference from known
C1*** humidity ratio
        newW = ((Prop(Hfg)-(Prop(CpWat)-Prop(CpVap))*WetBulb)*wStar-
     &           Prop(CpAir)*(TDB-WetBulb))/(Prop(Hfg)+Prop(CpVap)*TDB
     &          -Prop(CpWat)*WetBulb)
C1*** Check error, if not satisfied, calculate new guess and iterate
        error = W-newW
        WetBulb = XITERATE(WetBulb,error,X1,F1,X2,F2,iter,icvg)
C1*** If converged, leave iteration loop.
        IF (icvg .EQ. 1) GO TO 900
C1*** Wet bulb temperature not converged, repeat calculation with new
C1*** estimate of wet bulb temperature.
  100 CONTINUE

C1*** Wet bulb temperature has not converged after maximum specified
C1*** iterations. Print error message, set return error flag, and RETURN
      WRITE(LUW,1009) itmax
 1009 FORMAT(/1X,'*** ERROR IN FUNCTION WetBulb ***'/
     &        1X,'    Wet bulb temperature has not '
     &           'converged after ',I2,' iterations'/)

  900 IF (WetBulb .GT. TDB) WetBulb = TDB

  999 RETURN
```

```
      END


       REAL FUNCTION DRYBULB3 (Prop,H,W)
C*********************************************************************
C*    Copyright ASHRAE.  Toolkit for HVAC System Energy Calculations
C*********************************************************************
C*    FUNCTION: DRYBULB3
C*
C*    LANGUAGE: FORTRAN 77
C*
C*    PURPOSE:  Calculate the dry bulb temperature of
C*              moist air from enthalpy and humidity.
C*********************************************************************
C*    INPUT VARIABLES:
C*    H             Enthalpy                                    (J/kg)
C*    W             Humidity ratio                                 (-)
C*
C*    OUTPUT VARIABLES:
C*    Drybulb3       Dry bulb temperature                           (C)
C*
C*    PROPERTIES:
C*    CpAir         Specific heat of air                       (J/kg C)
C*    CpVap         Specific heat of water vapor               (J/kg C)
C*    Hfg           Reference heat of vaporization of water       (J/kg)
C*********************************************************************
C     MAJOR RESTRICTIONS:     Uses perfect gas relationships
C                             Fit for enthalpy of saturated water vapor
C
C     DEVELOPER:              Shauna Gabel
C                             Michael J. Brandemuehl, PhD, PE
C                             University of Colorado at Boulder
C
C     DATE:                   January 1, 1992
C
C     INCLUDE FILES:          PROP.INC
C     SUBROUTINES CALLED:     None
C     FUNCTIONS CALLED:       None
C
C     REVISION HISTORY:       None
C
C     REFERENCE:              1989 ASHRAE Handbook - Fundamentals
C*********************************************************************
      INTEGER Patm,CpAir,CpWat,CpLiq,CpVap,DViscAir,
     &        DViscLiq,KAir,KLiq,RhoLiq,Hfg,RAir,
     &        TKelMult,TAbsAdd,PaMult,PAbsAdd

      REAL Prop(16)

      PARAMETER (Patm     = 1)
      PARAMETER (CpAir    = 2)
      PARAMETER (CpWat    = 3)
      PARAMETER (CpVap    = 4)
      PARAMETER (CpLiq    = 5)
      PARAMETER (DViscAir = 6)
      PARAMETER (DViscLiq = 7)
      PARAMETER (KAir     = 8)
      PARAMETER (KLiq     = 9)
      PARAMETER (RhoLiq   = 10)
      PARAMETER (Hfg      = 11)
      PARAMETER (RAir     = 12)
      PARAMETER (TKelMult = 13)
      PARAMETER (TAbsAdd  = 14)
      PARAMETER (PaMult   = 15)
      PARAMETER (PAbsAdd  = 16)
```

```
C1*** Calculate the dry bulb temperature as a function of enthalpy and
C1*** humidity ratio.
C2*** hDryAir = Prop(CpAir)*TDB
C2*** hSatVap = Prop(Hfg) + Prop(CpVap)*TDB
C2*** Enthalpy = hDryAir + W*hSatVap
      Drybulb3 = (H-Prop(Hfg)*W)/(Prop(CpAir)+Prop(CpVap)*W)

      RETURN
      END

      REAL FUNCTION XITERATE (X0,F0,X1,F1,X2,F2,ICount,ICvg)
C***********************************************************************
C*    Copyright ASHRAE.  Toolkit for HVAC System Energy Calculations
C***********************************************************************
C*
C*    SUBROUTINE: XITERATE
C*
C*    LANGUAGE:   FORTRAN 77
C*
C*    PURPOSE:    Iterately solves for the value of X which
C*                satisfies F(X)=0. Given Xi,F(Xi) pairs,
C*                the subroutine tests for convergence and
C*                provides a new guess for the value of the
C*                independent variable X.
C***********************************************************************
C*    INPUT VARIABLES
C*    F0            Current value of the function F(X)
C*    X0            Current value of X
C*    F1,F2         Two previous values of F(Xi)
C*    X1,X2         Two previous values of X
C*
C*        NOTE:     F1,X1,F2,X2 MUST BE STORED AND SAVED IN CALLING
C*                  ROUTINE.  THEY NEED NO INITIALIZATION
C*
C*    ICount        Number of iterations
C*
C*    OUTPUT VARIABLES
C*    XIterate      New estimate of X for F(X)=0
C*    ICvg          Convergence flag  ICvg = 0:  Not converged
C*                                    ICvg = 1:  Converged
C***********************************************************************
C     DEVELOPER:              Michael J. Brandemuehl, PhD, PE
C                             University of Colorado at Boulder
C
C     DATE:                   January 1, 1992
C
C     INCLUDE FILES:          None
C     SUBROUTINES CALLED:     None
C     FUNCTIONS CALLED:       None
C
C     REVISION HISTORY:       None
C
C     REFERENCE:              None
C***********************************************************************
C     INTERNAL VARIABLES
C     small         Small number used in place of zero
C     mode          Number of points used in fit
C                   mode = 1:  Use XPerburb to get new X
C                   mode = 2:  Linear equation to get new X
C                   mode > 2:  Quadratic equation to get new X
C     coef(i)       Coefficients for quadratic fit
C                   F(X) = coef(1) + coef(2)*X + coef(3)*X*X
C     check         Term under radical in quadratic solution
C     FiQ,XiQ       Double precision values of Fi,Xi
C     slope         Slope for linear fit
C     tolRel        Relative error tolerance
```

```
C     xPerturb      Perturbation applied to X to initialize iteration
C*********************************************************************
      DOUBLE PRECISION coef(3),check,F0Q,F1Q,F2Q,X0Q,X1Q,X2Q

      DATA tolRel/1.E-5/,xPerturb/0.1/,small/1.E-9/

C1*** Check for convergence by comparing change in X
      IF ((ABS(X0-X1) .LT. tolRel*MAX(ABS(X0),small) .AND.
     &     ICount .NE. 1) .OR. F0 .EQ. 0.) THEN
        XIterate = X0
        ICvg=1
        RETURN
      ENDIF

C1*** Not converged.
C2*** If after the second iteration there are enough previous points to
C2    fit a quadratic for the new X.  If the quadratic fit is not
C2    applicable, mode will be set to 1 or 2 and a new X will be
C2    determined by incrementing X from xPerturb or from a linear fit.
      ICvg=0
      mode=ICount
 10   IF (mode .EQ. 1) THEN
C1*** New guess is specified by xPerturb
        IF (ABS(X0) .GT. small) THEN
          XIterate = X0*(1.+xPerturb)
        ELSE
          XIterate = xPerturb
        ENDIF
      ELSEIF (mode .EQ. 2) THEN
C1*** New guess calculated from LINEAR FIT of most recent two points
        SLOPE=(F1-F0)/(X1-X0)
        IF(slope.EQ.0) THEN
          mode=1
          GO TO 10
        ENDIF
        XIterate=X0-F0/SLOPE
      ELSE
C1*** New guess calculated from QUADRATIC FIT
C1*** If two Xi are equal, set mode for linear fit and return to top
        IF (X0 .EQ. X1) THEN
          X1=X2
          F1=F2
          mode=2
          GO TO 10
        ELSEIF (X0 .EQ. X2) THEN
          mode=2
          GO TO 10
        ENDIF
C1*** Determine quadratic coefficients from the three data points
C1*** using double precision.
        F2Q=F2
        F1Q=F1
        F0Q=F0
        X2Q=X2
        X1Q=X1
        X0Q=X0
        coef(3)=((F2Q-F0Q)/(X2Q-X0Q)-(F1Q-F0Q)/(X1Q-X0Q))/(X2Q-X1Q)
        coef(2)=(F1Q-F0Q)/(X1Q-X0Q)-(X1Q+X0Q)*coef(3)
        coef(1)=F0-(coef(2)+coef(3)*X0Q)*X0Q
C1*** If points are colinear, set mode for linear fit and return to top
        IF (ABS(coef(3)) .LT. 1.D-10) THEN
          mode=2
          GO TO 10
        ENDIF
C1*** Check for precision.  If the coefficients do not accurately
C1*** predict the given data points due to round-off errors, set
```

```
C1*** mode for a linear fit and return to top.
        IF (ABS((coef(1)+(coef(2)+coef(3)*X1Q)*X1Q-F1Q)/F1Q) .GT.
     &     1.D-4) THEN
           mode=2
           GO TO 10
        ENDIF
C1*** Check for imaginary roots.  If no real roots, set mode to
C1*** estimate new X by simply incrementing by xPerturb
        check=coef(2)**2-4*coef(1)*coef(3)
        IF (check .LT. 0) THEN
C1*** Imaginary roots -- go back to linear fit
          mode=2
          GO TO 10
        ELSEIF (check .GT. 0) THEN
C1*** Real unequal roots -- determine root nearest to most recent guess
          XIterate=(-coef(2)+SQRT(check))/coef(3)/2
          xOther=-XIterate-coef(2)/coef(3)
          IF (ABS(XIterate-X0) .GT. ABS(xOther-X0)) XIterate=xOther
        ELSE
C1*** Real Equal Roots -- one solution
          XIterate=-coef(2)/coef(3)/2
        ENDIF
      ENDIF

C1*** Set previous variable values for the next iteration
      IF (mode .LT. 3) THEN
C1*** No valid previous points to eliminate.
        X2=X1
        F2=F1
        X1=X0
        F1=F0
      ELSE
C1*** Eliminate one previous point based on sign and magnitude of F(X)
C2*** Keep the current point and eliminate one of the previous ones.
        IF (F1*F0 .GT. 0 .AND. F2*F0 .GT. 0) THEN
C2*** All previous points of same sign.  Eliminate one with biggest F(X)
          IF (ABS(F2) .GT. ABS(F1)) THEN
            X2=X1
            F2=F1
          ENDIF
        ELSE
C1*** Points of different sign.
C1*** Eliminate the previous one with the same sign as current F(X).
          IF (F2*F0 .GT. 0)  THEN
            X2=X1
            F2=F1
          ENDIF
        ENDIF
        X1=X0
        F1=F0
      ENDIF

      RETURN
      END
```

Subroutine TYPE 77: Zone Return Air Mixing

SUBROUTINE AND FUNCTION CALL MAPPING

Return Air Temp - Calculate the humidity ratio of the return air stream from zone latent loads

```
        SUBROUTINE TYPE77 (TIME,XIN,OUT,T,DTDT,PAR,INFO,ICNTRL,*)
           CALL TYPECK(IOPT,INFO,NI,NP,ND) -- subroutine in TRNWIN\Kernal\typeck.for
           CALL RCHECK(INFO,YCHECK,OCHECK) -- subroutine in TRNWIN\Kernal\rcheck.for
```

SOURCE CODE

```
      SUBROUTINE TYPE77 (TIME,XIN,OUT,T,DTDT,PAR,INFO,ICNTRL,*)
C*********************************************************************
C*    HVAC Thermal Distribution System Energy Calculations
C*********************************************************************
C*    SUBROUTINE: Return Air Temp
C*
C*    LANGUAGE:   FORTRAN 77
C*
C*    PURPOSE:    Calculate the humidity ratio of
C*                the return air stream from zone
C*                latent loads
C*
C*********************************************************************
C*    INPUT VARIABLES DISCRIPTION(UNITS)                      SAMPLE VALUES
C*    XIN(1) MLvg   Dry air mass flow rate of primary air (kg/s) 10.0
C*    XIN(2) TLvg   Weighted Temperature of zone1 (C Kg)         30.0
C*    XIN(3) TLvg   Weighted Temperature of zone2 (C Kg)         30.0
C*    XIN(4) TLvg   Weighted Temperature of zone3 (C Kg)         30.0
C*    XIN(5) TLvg   Weighted Temperature of zone4 (C Kg)         30.0
C*    XIN(6) TLvg   Weighted Temperature of zone5 (C Kg)         30.0
C*    XIN(7) Wcc    Humidity ratio of primary air stream (-)       .0017
C*    XIN(8) Qlat   Total zones latent load  (W)              10000.
C*
C*    OUTPUT VARIABLES
C*    OUT(1) MAirRet Dry air mass flow rate of return   (kg/s)    3.65
C*    OUT(2) TAirRet    Temperature of zones (C)                 11.7877
C*    OUT(3) WAirRet    Humidity ratio of return air stream (-)    .00508950
C*    OUT(4) ErrStat Error flag (0=ok, 1=error) (-)               0.0
C*********************************************************************
C     MAJOR RESTRICTIONS:     None
C
C     DEVELOPER:              Ellen Franconi
C                             University of Colorado at Boulder
C
C     DATE:                   November 1997
C
C     INCLUDE FILES:          None
C     SUBROUTINES REQUIRED:   None
C     FUNCTIONS REQUIRED:     None
C
C     REVISION HISTORY:       None
C
C     REFERENCE:              None
C*********************************************************************
C     INTERNAL VARIABLES
C      none
C*********************************************************************
      DOUBLE PRECISION XIN, OUT

      INTEGER INFO,IOPT,NI,NP,ND

      REAL MLVG,MAirRet,CPAIR,CPVAP,HFG

      DIMENSION XIN(8),OUT(4),INFO(15)
```

```
      CHARACTER*3 YCHECK(8),OCHECK(4)

      COMMON /LUNITS/LUR,LUW,IFORM,LUK

      DATA small/1.E-9/, itmax/20/
      DATA CPAIR/1006.0/,CPVAP/1805.0/,HFG/250100.0/
      DATA YCHECK/'MF2','DM1','DM1','DM1','DM1','DM1','DM1','PW2'/
      DATA OCHECK/'MF2','TE1','DM1','DM1'/

      ErrStat = 0

      IOPT    = -1
      NI      = 8            !CORRECT NUMBER OF INPUTS
      NP      = 0            !CORRECT NUMBER OF PARAMETERS
      ND      = 0            !CORRECT NUMBER OF DERIVATIVES

      MLVG  = XIN(1)
      Wcc   = XIN(7)
      Qlat  = XIN(8)

      IF (INFO(7).EQ.-1) THEN
        CALL TYPECK(IOPT,INFO,NI,NP,ND)
C       CHECKS TO SEE IF USER'S INFO MATCHES CORRECT NUMBERS
        CALL RCHECK(INFO,YCHECK,OCHECK)
C       CHECKS TO SEE IF INPUT AND OUTPUT UNITS MATCH
        INFO(6)=4
      ENDIF

C1*** If Mair is zero, fan is off. Set values to zero and return
      IF (MLVG .EQ. 0.) THEN
        MAirRet=0.
        TAirRet=0.
        WAirRet=0.
        GO TO 999
      ENDIF

      TLvg  = (XIN(2)+XIN(3)+XIN(4)+XIN(5)+XIN(6))/XIN(1)
      WAirRet=Wcc+Qlat/(HFG*Mlvg)
      TAirRet=Tlvg
      MAirRet=Mlvg

 999  CONTINUE

      OUT(1)=MAirRet
      OUT(2)=TAirRet
      OUT(3)=WAirRet
      OUT(4)=ERRSTAT

      RETURN 1
      END
```

Subroutine TYPE 80: Economizer

SUBROUTINE AND FUNCTION CALL MAPPING

```
Model an outside air economizer controlled to mix outdoor and return air
C*                to a set mixed air temperature when
C*                the outside air conditions are beneficial
C*                for reducing cooling energy usage.
        SUBROUTINE TYPE80 (TIME,XIN,OUT,T,DTDT,PAR,INFO,ICNTRL,*)
           CALL TYPECK(IOPT,INFO,NI,NP,ND) -- subroutine in TRNWIN\Kernal\typeck.for
           CALL RCHECK(INFO,YCHECK,OCHECK) -- subroutine in TRNWIN\Kernal\rcheck.for

           CALL MIXOAIR (Prop,MAirAmb,TAirAmb,WAirAmb,MAirRet,TAirRet, -- subroutine
                                                                        S1 in type 80
     &                WAirRet,MAirMix,TAirMix,WAirMix,ErrStat)
           CALL MIXIAIR (Prop,MAirMix,TSetMix,TAirAmb,WAirAmb,TAirRet, -- subroutine
                                                                        S2 in type 80
     &                  WAirRet,MAirAmb,MAirRet,WAirMix,ErrStat)
           CALL MIXOAIR (Prop,MAirAmb,TAirAmb,WAirAmb,MAirRet,TAirRet, -- subroutine
                                                                        S1 in type 80
     &                WAirRet,MAirMix,TAirMix,WAirMix,ErrStat)
           hret = ENTHALPY3(Prop,TAirRet,WAirRet) -- function F2 in type 75
           hmix = ENTHALPY3(Prop,TAirMix,WAirMix) -- function F2 in type 75
           hoa = ENTHALPY3(Prop,TAirAmb,WAirAmb) -- function F2 in type 75

        S1 SUBROUTINE MIXOAIR (Prop,M1Ent,T1Ent,W1Ent,M2Ent,T2Ent,W2Ent,
     &                    MLvg,TLvg,WLvg,ErrStat)
              Calculate the leaving temperature, humidity ratio and mass flow rate of
              two mixed air streams by simple conservation.
           h1Ent = ENTHALPY3(Prop,T1Ent,W1Ent) -- function F2 in type 75
           h2Ent = ENTHALPY3(Prop,T2Ent,W2Ent) -- function F2 in type 75
           TLvg = DRYBULB3(Prop,hLvg,WLvg) -- function F13 in type 75

        S2 SUBROUTINE MIXIAIR (Prop,MLvg,TLvg,T1Ent,W1Ent,T2Ent,W2Ent,
     &                    M1Ent,M2Ent,WLvg,ErrStat)
              Calculate the mass flow rate of two entering air streams of a mixing box
              with a known leaving mass flow rate and the temperatures of all the
              streams.
           CALL MIXOAIR (PROP,M1Ent,T1Ent,W1Ent,M2Ent,T2Ent,W2Ent, -- subroutine S1
                                                                     in type 80
     &                mEst ,TLvg,WLvg,ErrStat)
           M1Ent = XITERATE(M1Ent,error,X1,F1,X2,F2,iter,icvg) -- function F14
                                                                 in type 75

 1 PROP(PATM)     =  101325.0       Atmospheric pressure (Pa)
 2 PROP(CPAIR)    =    1006.0       Specific heat of dry air (J/kg C)
 3 PROP(CPWAT)    =    4186.0       Specific heat of liquid water (J/kg C)
 4 PROP(CPVAP)    =    1805.0       Specific heat of saturated water
                                     vapor (J/kg C)
 5 PROP(CPLIQ)    =    4186.0
 6 PROP(DVISCAIR) =        .0000182 Air dynamic viscosity (kg/m s)
 7 PROP(DVISCLIQ) =        .00144   Liquid dynamic viscosity (kg/m s)
 8 PROP(KAIR)     =        .026     Air thermal conductivity (W/m C)
 9 PROP(KLIQ)     =        .604     Liquid thermal conductivity (W/m C)
10 PROP(RHOLIQ)   =     998.0       Liquid density (kg/m3)
11 PROP(HFG)      = 2501000.0       Latent heat of vaporization of water (J/kg)
12 PROP(RAIR)     =     287.055     Gas constant for air (J/kg C)
13 PROP(TKELMULT) =       1.0       Multiplying factor to convert user
                                     T to Kelvin
14 PROP(TABSADD)  =     273.15      Additive factor to convert user P to Kelvin:
                                     tKel = Prop(TKelMult)*T + Prop(TKelAdd)
15 PROP(PAMULT)   =       1.0       Multiplying factor to convert user P to
                                     Pascals
16 PROP(PABSADD)  =       0.0       Additive factor to convert user P to Pascals:
                                     Pa = Prop(PaMult)*P + Prop(PaAdd)
```

SOURCE CODE

```
      SUBROUTINE TYPE80 (TIME,XIN,OUT,T,DTDT,PAR,INFO,ICNTRL,*)
C***********************************************************************
C*    Copyright ASHRAE.  Toolkit for HVAC System Energy Calculations
C***********************************************************************
C*    SUBROUTINE: ECON
C*
C*    LANGUAGE:   FORTRAN 77
C*
C*    PURPOSE:    To model an outside air economizer
C*                controlled to mix outdoor and return air
C*                to a set mixed air temperature when
C*                the outside air conditions are beneficial
C*                for reducing cooling energy usage.
C***********************************************************************
C*    INPUT VARIABLES  DESCRIPTION(UNITS)                        SAMPLE VALUES
C*    XIN(1)  TAirRet  Return air dry bulb temperature(C)          23.8
C*    XIN(2)  WAirRet  Return air humidity ratio(-)                  .0077
C*    XIN(3)  TAirAmb  Outside air dry bulb temperature(C)         10.0
C*    XIN(4)  WAirAmb  Outside air humidity ratio(-)                 .0017
C*    XIN(5)  MAirMix  Mixed dry air mass flow rate(kg/s)           1.89
C*    XIN(6)  MAmbMin  Minimum outside air mass flow rate(kg/s)      .378
C*    XIN(7)  TSetMix  Mixed air temperature setpoint(C)           12.8
C*    XIN(8) VarClose  Ambient air control variable                10.0
C*    XIN(9) SetClose  Ambient air design parameter for            24.0
C*                     minimum damper position
C*    XIN(10)  HCMode  Heating or cooling mode indicator            1.0
C*                     Heating:  HCMode = 0
C*                     Cooling:  HCMode = 1
C*          Note:      Economizer cooling is considered to be unavailable
C*                     if VarClose > SetClose .OR. HCMode = 0
C*
C*    OUTPUT VARIABLES:
C*    OUT(1)  TAirMix  Mixed air temperature(C)                    12.8
C*    OUT(2)  WAirMix  Mixed air humidity ratio(C)                   .00290009
C*    OUT(3)  MAirRet  Return dry air mass flow rate(kg/s)           .378029
C*    OUT(4)  MAirAmb  Ambient dry air mass flow rate(kg/s)         1.510
C*    OUT(5)  QHe      Q added using econ  (W)                   -6000.
C*    OUT(6)  QCe      Q removed using economizer (W)             5000.
C*    OUT(7)  QHoa     Q added by outdoor air  (W)               -5000.
C*    OUT(8)  QCoa     Q removed by outdoor air (W)               1000.
C***********************************************************************
C     MAJOR ASSUMPTION:       None
C
C     DEVELOPER:              Shauna Gabel
C                             Michael J. Brandemuehl, PhD, PE
C                             University of Colorado at Boulder
C
C     DATE:                   January 1, 1992
C
C     INCLUDE FILES:          None
C     SUBROUTINES CALLED:     MIXOAIR
C                             MIXIAIR
C     FUNCTIONS CALLED:       None
C
C     REVISION HISTORY:       None
C
C     REFERENCE:              ASHRAE.  1983.  Simplified Energy
C                             Analysis Using the Modified Bin Method,
C                             Atlanta: American Society of Heating,
C                             Refrigeration, and Air-Conditioning
C                             Engineers, Inc. pp.4-14-4-18.
C***********************************************************************
      REAL prop(16),MAMBMIN,MAIRMIX,MairAmb,MAirRet,QHe,QCe,QHoa,QCoa
      REAL hret,hmix,hoa
```

```
 DOUBLE PRECISION XIN, OUT

 INTEGER INFO(15),IOPT,NI,NP,ND

 DIMENSION XIN(10),OUT(8)

 INTEGER Patm,CpAir,CpWat,CpLiq,CpVap,DViscAir,
&        DViscLiq,KAir,KLiq,RhoLiq,Hfg,RAir,
&        TKelMult,TAbsAdd,PaMult,PAbsAdd,errstat

 CHARACTER*3 YCHECK(10),OCHECK(8)

 COMMON /LUNITS/LUR,LUW,IFORM,LUK

 PARAMETER (Patm     = 1)
 PARAMETER (CpAir    = 2)
 PARAMETER (CpWat    = 3)
 PARAMETER (CpVap    = 4)
 PARAMETER (CpLiq    = 5)
 PARAMETER (DViscAir = 6)
 PARAMETER (DViscLiq = 7)
 PARAMETER (KAir     = 8)
 PARAMETER (KLiq     = 9)
 PARAMETER (RhoLiq   = 10)
 PARAMETER (Hfg      = 11)
 PARAMETER (RAir     = 12)
 PARAMETER (TKelMult = 13)
 PARAMETER (TAbsAdd  = 14)
 PARAMETER (PaMult   = 15)
 PARAMETER (PAbsAdd  = 16)

 PROP(PATM)     =  101325.0
 PROP(CPAIR)    =    1006.0
 PROP(CPWAT)    =    4186.0
 PROP(CPVAP)    =    1805.0
 PROP(CPLIQ)    =    4186.0
 PROP(DVISCAIR) =        .0000182
 PROP(DVISCLIQ) =        .00144
 PROP(KAIR)     =        .026
 PROP(KLIQ)     =        .604
 PROP(RHOLIQ)   =     998.0
 PROP(HFG)      = 2501000.0
 PROP(RAIR)     =     287.055
 PROP(TKELMULT) =       1.0
 PROP(TABSADD)  =     273.15
 PROP(PAMULT)   =       1.0
 PROP(PABSADD)  =       0.0

 DATA YCHECK/'TE1','DM1','TE1','DM1','MF2','MF2','TE1','TE1',
&            'TE1','DM1'/
 DATA OCHECK/'TE1','DM1','MF2','MF2','PW2','PW2','PW2','PW2'/

 ErrStat = 0

 IOPT    = -1
 NI      = 10      !CORRECT NUMBER OF INPUTS
 NP      = 0       !CORRECT NUMBER OF PARAMETERS
 ND      = 0       !CORRECT NUMBER OF DERIVATIVES

 TAIRRET  = XIN(1)
 WAIRRET  = XIN(2)
 TAIRAMB  = XIN(3)
 WAIRAMB  = XIN(4)
 MAIRMIX  = XIN(5)
 MAMBMIN  = XIN(6)
```

```
      TSETMIX  = XIN(7)
      VARCLOSE = XIN(8)
      SETCLOSE = XIN(9)
      HCMODE   = XIN(10)

      IF (INFO(7).EQ.-1) THEN
        CALL TYPECK(IOPT,INFO,NI,NP,ND)
        CALL RCHECK(INFO,YCHECK,OCHECK)
        INFO(6)=8
      ENDIF

C1*** If Mair is zero, fan is off. Set flow to zero and return
      IF (MAIRMIX .EQ. 0.) THEN
        TAIRMIX=-99
        WAIRMIX=0
        MAIRRET=0
        MAIRAMB=0
        QHe=0
        QCe=0
        QHoa=0
        QCoa=0
        GO TO 999
      ENDIF

C1*** Determine whether economizer operation is available and whether
C1*** system is in heating or cooling mode

C2*** VarClose and SetClose are subroutine variables that allow a
C2    general comparison between two indices to evaluate the
C2    availability of economizer cooling.  The physical significance
C2    of VarClose and SetClose depend on the technique for economizer
C2    control.  Generally, economizer operation is available if
C2    VarClose < SetClose.  For example, for simple dry bulb temperature
C2    control of an economizer, VarClose would be the outdoor temperature
C2    and SetClose would be the setpoint for outdoor air temperature
C2    above which the economizer damper is set to minimum outdoor air.
C2    For more sophisticated enthalpy control, VarClose could be the
C2    outdoor enthalpy and SetClose could be the return air enthalpy,
C2    causing the economizer damper to close to minimum outdoor air if
C2    the outdoor air enthalpy is greater than the return air enthalpy.
      IF (VarClose .GT. SetClose .OR. NINT(HCMode) .EQ. 0) THEN
C1*** Economizer operation not available.  Close damper to minimum
C1*** and calculate mixed air conditions.
        MAirAmb = MAmbMin
        MAirRet = MAirMix-MAirAmb
        CALL MIXOAIR (Prop,MAirAmb,TAirAmb,WAirAmb,MAirRet,TAirRet,
     &                WAirRet,MAirMix,TAirMix,WAirMix,ErrStat)
      ELSE
C1*** Economizer operation available.  Calculate outdoor and return
C1*** airflow rates depending on comparison outdoor, return and mixed
C1*** air setpoint temperatures.
        IF ((TSetMix .GT. TAirAmb) .AND. (TSetMix .LT. TAirRet)) THEN
C1*** Normal economizer operation.
C1*** Calculate outdoor and return flow rates, ensuring that the outdoor
C1*** flow rate not less than minimum ventilation flow
          CALL MIXIAIR (Prop,MAirMix,TSetMix,TAirAmb,WAirAmb,TAirRet,
     &                  WAirRet,MAirAmb,MAirRet,WAirMix,ErrStat)
          IF (MAirAmb .LE. MAmbMin) THEN
            MAirAmb = MAmbMin
            MAirRet = MAirMix-MAirAmb
          ENDIF
        ELSEIF ((TAirRet-TSetMix) .GT. (TAirAmb-TSetMix)) THEN
C1*** Mixed air temperature setpoint is not between the return
C1*** and outdoor air temperatures and the ambient air temperature
C1*** less than the return air temperature
          MAirAmb = MAirMix
```

```
          MAirRet = 0.0
        ELSE
C1*** Mixed air temperature setpoint is not between the return
C1*** and outdoor air temperatures and the ambient air temperature
C1*** greater than the return air temperature
          MAirAmb = MAmbMin
          MAirRet = MAirMix-MAirAmb
        ENDIF
C1*** Calculate mixed air conditions for abnormal economizer operartion
        CALL MIXOAIR (Prop,MAirAmb,TAirAmb,WAirAmb,MAirRet,TAirRet,
     &                WAirRet,MAirMix,TAirMix,WAirMix,ErrStat)
      ENDIF

C1*** Calculate cooling contribution from economizer/outdoor air
C1*** negative => heating; positve => cooling
      hret = ENTHALPY3(Prop,TAirRet,WAirRet)
      hmix = ENTHALPY3(Prop,TAirMix,WAirMix)
      hoa = ENTHALPY3(Prop,TAirAmb,WAirAmb)

      Qecon=0.
      Qoa=0.
      QHe=0.
      QCe=0.
      QHoa=0.
      QCoa=0.

      IF (MAirAmb .GT. MAmbMin)  THEN
        Qecon = (hret-hmix)*MAIRAMB
      ELSE
        Qoa = (hoa-hret)*MAIRAMB
      ENDIF

      IF (Qecon .NE. 0) THEN
        IF (Qecon .LT. 0) THEN
          QHe = Qecon
        ELSE
          QCe = Qecon
        ENDIF
      ENDIF

      IF (Qoa .NE. 0) THEN
        IF (Qoa .LT. 0) THEN
          QHoa = Qoa
        ELSE
          QCoa = Qoa
        ENDIF
      ENDIF

999   Continue

      OUT(1) = TAIRMIX
      OUT(2) = WAIRMIX
      OUT(3) = MAIRRET
      OUT(4) = MAIRAMB
      OUT(5) = QHe
      OUT(6) = QCe
      OUT(7) = QHoa
      OUT(8) = QCoa

      RETURN 1
      END

      SUBROUTINE MIXOAIR (Prop,M1Ent,T1Ent,W1Ent,M2Ent,T2Ent,W2Ent,
     &                    MLvg,TLvg,WLvg,ErrStat)
C*********************************************************************
C*    Copyright ASHRAE.  Toolkit for HVAC System Energy Calculations
```

```
C*********************************************************************
C*    SUBROUTINE: MIXOAIR
C*
C*    LANGUAGE:   FORTRAN 77
C*
C*    PURPOSE:    Calculate the leaving temperature,
C*                humidity ratio and mass flow rate of two
C*                mixed air streams by simple conservation.
C*********************************************************************
C*    INPUT VARIABLES
C*    M1Ent       Dry air mass flow rate of stream 1            (kg/s)
C*    T1Ent       Entering temperature of stream 1                 (C)
C*    W1Ent       Entering humidity ratio of stream 1              (-)
C*    M2Ent       Dry air mass flow rate of stream 2            (kg/s)
C*    T2Ent       Entering temperature of stream 2                 (C)
C*    W2Ent       Entering humidity ratio of stream 2              (-)
C*
C*    OUTPUT VARIABLES
C*    MLvg        Dry air mass flow rate of mixed stream        (kg/s)
C*    TLvg        Temperature of mixed stream                      (C)
C*    WLvg        Humidity ratio of mixed stream                   (C)
C*    ErrStat     Error flag (0=ok, 1=error)                       (-)
C*********************************************************************
C     MAJOR RESTRICTION:      None
C
C     DEVELOPER:              Shauna Gabel, MS
C                             Michael J. Brandemuehl, PhD, PE
C                             University of Colorado at Boulder
C
C     DATE:                   January 1, 1992
C
C     INCLUDE FILES:          None
C     SUBROUTINES CALLED:     ENTHALPY3
C                             DRYBULB3
C     FUNCTIONS REQUIRED:     None
C
C     REVISION HISTORY:       None
C
C     REFERENCE:              None
C*********************************************************************
C*    INTERNAL VARIABLES
C*    small         Small number used in place of zero
C*********************************************************************
      REAL prop(16),M1Ent,M2Ent,MLvg,TLVG,WLVG

      INTEGER Patm,CpAir,CpWat,CpLiq,CpVap,DViscAir,
     &        DViscLiq,KAir,KLiq,RhoLiq,Hfg,RAir,
     &        TKelMult,TAbsAdd,PaMult,PAbsAdd,errstat

      PARAMETER (Patm     = 1)
      PARAMETER (CpAir    = 2)
      PARAMETER (CpWat    = 3)
      PARAMETER (CpVap    = 4)
      PARAMETER (CpLiq    = 5)
      PARAMETER (DViscAir = 6)
      PARAMETER (DViscLiq = 7)
      PARAMETER (KAir     = 8)
      PARAMETER (KLiq     = 9)
      PARAMETER (RhoLiq   = 10)
      PARAMETER (Hfg      = 11)
      PARAMETER (RAir     = 12)
      PARAMETER (TKelMult = 13)
      PARAMETER (TAbsAdd  = 14)
      PARAMETER (PaMult   = 15)
      PARAMETER (PAbsAdd  = 16)
```

```
      DATA small/1.E-9/

      ErrStat = 0

C1*** Calculate the mass flow rate of the mixed stream.
      MLvg = M1Ent+M2Ent

C1*** If leaving flow is zero, set leaving conditions to those of
C1    stream 1 and RETURN.
      IF (ABS(MLvg) .LE. small) THEN
        WLvg = W1Ent
        TLvg = T1Ent
      ELSE
C1*** Leaving flow is not zero.  Proceed with calculations.
C1*** Calculate the humidity ratio of the mixed stream
        WLvg = (M1Ent*W1Ent+M2Ent*W2Ent)/MLvg
C1*** Calculate the mixed stream temperature from enthalpy and humidity
        h1Ent = ENTHALPY3(Prop,T1Ent,W1Ent)
        h2Ent = ENTHALPY3(Prop,T2Ent,W2Ent)
        hLvg = (M1Ent*h1Ent+M2Ent*h2Ent)/MLvg
        TLvg = DRYBULB3(Prop,hLvg,WLvg)
      ENDIF

      RETURN
      END
C*********************************************************************
C*    FILE: PROP.INC
C*
C*    This file assigns a numbers to air and water property names to be
C*    used in the "Prop" array.
C*********************************************************************
C     DEVELOPER:       Inger Andresen
C                      Michael J. Brandemuehl, PhD, PE
C
C     DATE:            July 1, 1991
C
C     FILES REQUIRED:  None
C*********************************************************************
C     INTERNAL VARIABLES:
C     Patm          Atmospheric pressure                          (Pa)
C     CpAir         Specific heat of dry air                   (J/kg C)
C     CpLiq         Specific heat of liquid water              (J/kg C)
C     CpVap         Specific heat of saturated water vapor     (J/kg C)
C     DViscAir      Air dynamic viscosity                      (kg/m s)
C     DViscLiq      Liquid dynamic viscosity                   (kg/m s)
C     KAir          Air thermal conductivity                    (W/m C)
C     KLiq          Liquid thermal conductivity                 (W/m C)
C     RhoLiq        Liquid density                              (kg/m3)
C     Hfg           Latent heat of vaporization of water         (J/kg)
C     RAir          Gas constant for air                       (J/kg C)
C     TKelMult      Multiplying factor to convert user T to Kelvin
C     TAbsAdd       Additive factor to convert user P to Kelvin
C                   tKel = Prop(TKelMult)*T + Prop(TKelAdd)
C     PaMult        Multiplying factor to convert user P to Pascals
C     PAbsAdd       Additive factor to convert user P to Pascals
C                   Pa = Prop(PaMult)*P + Prop(PaAdd)
C*********************************************************************
C      INTEGER Patm,CpAir,CpWat,CpLiq,CpVap,DViscAir,
C     &        DViscLiq,KAir,KLiq,RhoLiq,Hfg,RAir,
C     &        TKelMult,TAbsAdd,PaMult,PAbsAdd
C      REAL Prop(16)
C
C      PARAMETER (Patm     = 1)
C      PARAMETER (CpAir    = 2)
C      PARAMETER (CpWat    = 3)
C      PARAMETER (CpVap    = 4)
```

```
C       PARAMETER (CpLiq    = 5)
C       PARAMETER (DViscAir = 6)
C       PARAMETER (DViscLiq = 7)
C       PARAMETER (KAir     = 8)
C       PARAMETER (KLiq     = 9)
C       PARAMETER (RhoLiq   = 10)
C       PARAMETER (Hfg      = 11)
C       PARAMETER (RAir     = 12)
C       PARAMETER (TKelMult = 13)
C       PARAMETER (TAbsAdd  = 14)
C       PARAMETER (PaMult   = 15)
C       PARAMETER (PAbsAdd  = 16)
C
      SUBROUTINE MIXIAIR (Prop,MLvg,TLvg,T1Ent,W1Ent,T2Ent,W2Ent,
     &                    M1Ent,M2Ent,WLvg,ErrStat)
C***********************************************************************
C*    Copyright ASHRAE.  Toolkit for HVAC System Energy Calculations
C***********************************************************************
C*    SUBROUTINE: MIXIAIR
C*
C*    LANGUAGE:   FORTRAN 77
C*
C*    PURPOSE:    Calculate the mass flow rate of two
C*                entering air streams of a mixing box with
C*                a known leaving mass flow rate and the
C*                temperatures of all the streams.
C***********************************************************************
C*    INPUT VARIABLES DISCRIPTION(UNITS)                 SAMPLE VALUES
C*    XIN(1) MLvg   Dry air mass flow rate of mixed stream (kg/s)
C*    XIN(2) TLvg   Temperature of mixed stream (C)
C*    XIN(3) T1En   Entering temperature of stream 1 (C)
C*    XIN(4) W1En   Entering humidity ratio of stream 1 (-)
C*    XIN(5) T2En   Entering temperature of stream 2 (C)
C*    XIN(6) W2Ent  Entering humidity ratio of stream 2 (-)
C*
C*    OUTPUT VARIABLES
C*    OUT(1) M1Ent   Dry air mass flow rate of stream 1 (kg/s)
C*    OUT(2) M2Ent   Dry air mass flow rate of stream 2 (kg/s)
C*    OUT(3) WLvg    Humidity ratio of mix air stream (-)
C*    OUT(4) ErrStat Error flag (0=ok, 1=error) (-)
C***********************************************************************
C     MAJOR RESTRICTIONS:     None
C
C     DEVELOPER:              Shauna Gabel
C                             Michael J. Brandemuehl, PhD, PE
C                             University of Colorado at Boulder
C
C     DATE:                   January 1, 1992
C
C     INCLUDE FILES:          None
C     SUBROUTINES REQUIRED:   MIXOAIR
C     FUNCTIONS REQUIRED:     XITERATE
C
C     REVISION HISTORY:       CPW20030418
C
C     REFERENCE:              None
C***********************************************************************
C     INTERNAL VARIABLES
C     deltaT        Temperature difference of entering streams       (C)
C     mEst          Estimate of leaving flow                      (kg/s)
C     small         Small number, in place of zero
C     target        Target for mixed air temperatyure                (C)
C     error         Deviation of dependent variable in iteration
C     iter          Iteration counter
C     icvg          Iteration convergence flag
C     F1,F2         Previous values of dependent variable in XITERATE
```

```
C     X1,X2         Previous values of independent variable in XITERATE
C*********************************************************************
      INTEGER Patm,CpAir,CpWat,CpLiq,CpVap,DViscAir,
     &        DViscLiq,KAir,KLiq,RhoLiq,Hfg,RAir,
     &        TKelMult,TAbsAdd,PaMult,PAbsAdd,ERRSTAT

      REAL Prop(16),MLVG,M1ENT,M2ENT,WLVG,TLVG,T1ENT,W1ENT,
     &     T2ENT,W2ENT

CPW20030418 Add next line to define I/O units
      COMMON /LUNITS/LUR,LUW,IFORM,LUK

       PARAMETER (Patm     = 1)
      PARAMETER (CpAir    = 2)
      PARAMETER (CpWat    = 3)
      PARAMETER (CpVap    = 4)
      PARAMETER (CpLiq    = 5)
      PARAMETER (DViscAir = 6)
      PARAMETER (DViscLiq = 7)
      PARAMETER (KAir     = 8)
      PARAMETER (KLiq     = 9)
      PARAMETER (RhoLiq   = 10)
      PARAMETER (Hfg      = 11)
      PARAMETER (RAir     = 12)
      PARAMETER (TKelMult = 13)
      PARAMETER (TAbsAdd  = 14)
      PARAMETER (PaMult   = 15)
      PARAMETER (PAbsAdd  = 16)

      DATA small/1.E-9/, itmax/20/

      ErrStat = 0

      deltaT = T2Ent-T1Ent

      IF(ABS(deltaT).LT.small) deltaT=small

C1*** Estimate the mass flow rate of stream 1 from a temperature balance
      M1Ent = (T2Ent-TLvg)/deltaT* MLvg
C1*** Set iteration loop parameters
      target = TLvg
C1*** BEGIN LOOP
      DO 100 iter = 1 ,itmax
C1*** Calculate leaving air temperature and humidity for estimated flows
        M2Ent = MLvg-M1Ent
        CALL MIXOAIR (PROP,M1Ent,T1Ent,W1Ent,M2Ent,T2Ent,W2Ent,
     &                mEst ,TLvg,WLvg,ErrStat)
C1*** Compare given leaving air temperature with estimated temperature
C1*** and determine new estimate of flow
        error = TLvg-target
        M1Ent = XITERATE(M1Ent,error,X1,F1,X2,F2,iter,icvg)
C1*** If converged, leave loop and RETURN
        IF (icvg .EQ. 1) GO TO 999
  100 CONTINUE

C1*** If not converged after itmax iterations, return error code

      WRITE(LUW,1005) itmax
 1005 FORMAT(/1X,'*** ERROR IN SUBROUTINE MIXIAIR ***'/
     &        1X,'    Temperature has not converged after, 'I2,
     &        '  iterations'/)
      ErrStat = 1

  999 RETURN
      END
```

Subroutine TYPE 81: Ceiling Return Plenum

SUBROUTINE AND FUNCTION CALL MAPPING

```
OPEN PLENUM RETURN - Return air temperature is calculated from a steady
C*                state energy balance on plenum. Heat gains/losses
C*                from lights, duct conduction, duct leakage,
C*                interior conduction, exterior conduction,
C*                and return air flow are included.
        SUBROUTINE TYPE81 (TIME,XIN,OUT,T,DTDT,PAR,INFO,ICNTRL,*)
           CALL TYPECK(IOPT,INFO,NI,NP,ND) -- subroutine in TRNWIN\Kernal\typeck.for
           CALL RCHECK(INFO,YCHECK,OCHECK) -- subroutine in TRNWIN\Kernal\rcheck.for
```

SOURCE CODE

```
      SUBROUTINE TYPE81 (TIME,XIN,OUT,T,DTDT,PAR,INFO,ICNTRL,*)
C*********************************************************************
C*    SUBROUTINE: OPEN PLENUM RETURN
C*
C*    LANGUAGE:   FORTRAN 77
C*
C*    PURPOSE:    Return air temperature is calculated from a steady
C*                state energy balance on plenum. Heat gains/losses
C*                from lights, duct conduction, duct leakage,
C*                interior conduction, exterior conduction,
C*                and return air flow are included.
C*******************************************************************
C*    INPUT VARIABLES DESCRIPTION(UNITS)                    SAMPLE VALUE
C*    XIN(1)   Mz     Zone air mass flow rate(kg/s)                 9.5
C*    XIN(2)   Tz     Zone air bulb temperature(C)                 22.5
C*    XIN(3)   HRz    Zone Humidity Ratio                           .009
C*    XIN(4)   Ta     Ambient Air Temperature      (C)              7.5
C*    XIN(5)   Qg     Internal gains from ceiling lights (W)     15000.0
C*    XIN(6)   Qc     Duct Conduction Heat Transfer (W)
C*    XIN(7)   Ql     Duct Leakage Heat Transfer (W)
C*    XIN(8)   Mlus   Mass leakage from duct upstream of boxes (kg/s) .05
C*    XIN(9)   HRl    Humidity Ratio of leakage air                 .004
C*    XIN(10)  Xlds   Downstream leakage fraction (-)
C*
C*    OUTPUT VARIABLES
C*    OUT(1)  Mp      Return Air Flowrate in Plenum (kg/s)         10.0
C*    OUT(2)  Tp      Return Air Temperature in Plenum (C)         25.5
C*    OUT(3)  HR      Return Air Humidity Ratio in Plenum           .008
C*    OUT(4) ErrStat  Error status indicator,0=ok,1=error(-)         0
C*
C*    PARAMETERS
C*    PAR(1)  UAe     Ext. perimeter heat transfer coef.  (J/C)
C*    PAR(2)  UAi     Int. ceil+floor heat transfer coef. (J/C)
C*******************************************************************
C     MAJOR RESTRICTIONS:     Model based on plenum located between
C                             two floors each having the same temp setpoint schedule
C
C     DEVELOPER:              Ellen Franconi
C                             Lawrence Berkeley Nat. Lab
C
C     DATE:                   February 9, 1998
C
C     INCLUDE FILES:          None
C     SUBROUTINES CALLED:     None
C     FUNCTIONS CALLED:       None
C
C     REVISION HISTORY:       CPW20030418
C
C     REFERENCE:
C
C*******************************************************************
      DOUBLE PRECISION XIN, OUT
```

```
      DIMENSION XIN(10), OUT(4), PAR(2)
      DIMENSION INFO(15)

      INTEGER ErrStat, IOPT, NI, NP, ND, INFO

      REAL Mz,Mr,PAR,Mp,HRz,HRl,Mlus,Mlds

      CHARACTER*3 YCHECK(10), OCHECK(4)

CPW20030418 Add next line to define I/O units
      COMMON /LUNITS/LUR,LUW,IFORM,LUK

      DATA YCHECK/'MF2','TE1','DM1','TE1','PW2','PW2','PW2','MF2',
     & 'DM1','DM1'/
      DATA OCHECK/'MF2','TE1','DM1','DM1'/
      DATA PATM/101325.0/,CPAIR/1006.0/,CPVAP/1805.0/,HFG/2501000/,
     & RAIR/287.055/, TABSADD/273.15/

CPW20030417 Added next line to initialize ErrStat
      ErrStat = 0

       IOPT = -1.
      NI   = 10.     !CORRECT NUMBER OF INPUTS
      NP   = 2.      !CORRECT NUMBER OF PARAMETERS
      ND   = 0.      !CORRECT NUMBER OF DERIVATIVES

      Mz   = XIN(1)
      Tz   = XIN(2)
      HRz  = XIN(3)
      Ta   = XIN(4)
      Qg   = XIN(5)
      Qc   = XIN(6)
      Ql   = XIN(7)
      Mlus = XIN(8)
      HRl  = XIN(9)
      Xlds = XIN(10)

      UAe  = PAR(1)
      UAi  = PAR(2)

      IF (INFO(7).EQ.-1) THEN
        CALL TYPECK(IOPT,INFO,NI,NP,ND)
C      CHECKS #S IN USER SUPLLIED INFO ARRAY W/ NI, NP, AND ND
        CALL RCHECK(INFO,YCHECK,OCHECK)
C     CHECKS TO SEE IF THE UNITS ARE CONSISTENT
        INFO(6)=4
      ENDIF

C1*** If Mz is zero, fan is off. Set values and return
      IF (Mz .EQ. 0.) THEN
        Mp=0.
        Tp=-99.
        HRp=0.0001
        GO TO 999
      ENDIF

C1*** Calculate total UA from zones to plenum
      UApz=UAi+Mz*CPAIR

C1*** Solve for plenum/system return air temperature
      Tp=(Qg-Qc-Ql+(UAe*Ta)+(UApz*Tz))/(UAe+UApz)

C1*** Zone return + duct leakage = Plenum return
      Mlds=(Mz/(1-Xlds))-Mz
      Mp=Mz+Mlus+Mlds
```

```
      HRp=(HRz*Mz+HRl*(Mlus+Mlds))/Mp

999   Continue

      OUT(1) = Mp
      OUT(2) = Tp
      OUT(3) = HRp
      OUT(4) = ERRSTAT

      RETURN 1
      END
```

Subroutine TYPE 82: Upstream Ducts

SUBROUTINE AND FUNCTION CALL MAPPING

```
DUCT LOSS AND LEAKAGE- Calculates heat transfer from conduction and leakage
C*                in a ducted air stream.  Losses based on a log mean
C*                temperature difference between air stream and
C*                surroundings (i.e. plenum). Conduction loss determined
C*                analytically using the effectiveness/NTU method.
C                        Leakage rate is set at fixed CFM upstream of boxes and fixed
C                        % of flow downstream of boxes
        SUBROUTINE TYPE82 (TIME,XIN,OUT,T,DTDT,PAR,INFO,ICNTRL,*)
           CALL TYPECK(IOPT,INFO,NI,NP,ND) -- subroutine in TRNWIN\Kernal\typeck.for
           CALL RCHECK(INFO,YCHECK,OCHECK) -- subroutine in TRNWIN\Kernal\rcheck.for

           Talm = XITERATE(Talm,error,X1,F1,X2,F2,iter,icvg) -- function F14
                                                                in type 75
```

SOURCE CODE

```
      SUBROUTINE TYPE82 (TIME,XIN,OUT,T,DTDT,PAR,INFO,ICNTRL,*)
C*********************************************************************
C*    Thermal Distribution System Model by EMFranconi
C*********************************************************************
C*    SUBROUTINE: DUCT LOSS AND LEAKAGE
C*
C*    LANGUAGE:   FORTRAN 77
C*
C*    PURPOSE:    Calculates heat transfer from conduction and leakage
C*                in a ducted air stream.  Losses based on a log mean
C*                temperature difference between air stream and
C*                surroundings (i.e. plenum). Conduction loss determined
C*                analytically using the effectiveness/NTU method.
C*********************************************************************
C*    INPUT VARIABLES   DESCRIPTION(UNITS)                    SAMPLE VALUE
C*    XIN(1)   Tai      Supply air temperature  (C)                 13.5
C*    XIN(2)   Mai      Fan air flowrate (kg/s)                     10.5
C*    XIN(3)   Mlus     Mass air leakage upstream of boxes (kg/s)     .10
C*    XIN(4)   Tpl      Temperature of air surrounding duct (C)     25.0
C*    XIN(5)   Xlds     Leakage fraction downstream of boxes (-)    25.0
C*    XIN(6)   TKGds    Box mass flow * downstream temperature (kg*C) 35.0
C*
C*    OUTPUT VARIABLES
C*    OUT(1)   Tboxes   Box inlet air temperature (C)               14.3
C*    OUT(2)   Mboxes   Box air flowrate (kg/s)                     10.0
C*    OUT(3)   Mzones   Zones supply air flowrate (kg/s)             9.0
C*    OUT(4)   Qcond    Conduction heat transfer  (W)              6000.
C*    OUT(5)   Qleak    Leakage heat transfer (W)                 10000.
C*    OUT(6)   ErrStat  Error status indicator,0=ok,1=error(-)         0
C*
C*    PARAMETERS
C*    PAR(1)  Ddct      Duct diameter (m)                             .30
C*    PAR(2)  Ldct      Duct length (m)                              20.
C*    PAR(3)  Ndct      Number of ducts (-)                          30
C*    PAR(4)  Rdct      Duct insulation R-value (C m2/W)              0.0
C*    PAR(5)  Losses    Loss/Leakage Calc Losses:
C                       0/off 1/leaks on 2/leaks+cond on (-)           1
C*********************************************************************
C     MAJOR RESTRICTIONS: With a constant static pressure setpoint, system pressure
C                         changes with flowrate.  These changes may affect leakage
rate.
C                         This simple model does not attempt to quantify this effect.
C                         Leakage rate is set at fixed CFM upstream of boxes and fixed
C                         % of flow downstream of boxes
C
C     DEVELOPER:          Ellen Franconi
```

```
C                         Lawrence Berkeley Nat. Lab
C
C     DATE:               February 9, 1998
C
C     INCLUDE FILES:      None
C     SUBROUTINES CALLED: None
C     FUNCTIONS CALLED:   None
C
C     REVISION HISTORY:   CPW20030418
C
C     REFERENCE:
C
C*********************************************************************
C     INTERNAL VARIABLES:
C     Talm     Log mean average air temp                  (C)
C     Taold    Last iterative value of Talm               (C)
C     hco      Duct exterior convective coefficient       (W/m2 C)
C     hrad     Duct exterior radiation coefficient        (W/m2 C)
C     hout     Duct exterior effective heat transfer coef (W/m2 C)
C     hin      Duct interior convection coefficienct      (W/m2 C)
C     htot     Overall duct heat transfer coefficient     (W/m2 C)
C     sv       Air specific volume                        (m3/kg)
C     v        Air velocity in duct                       (m/s)
C     emiss    Duct emissivity                            (-)
C     eff      effectiveness                              (-)
C     dTlm     Log mean temperature difference            (C)
C     small    Small number used in place of zero
C*********************************************************************
      DOUBLE PRECISION XIN, OUT

      DIMENSION XIN(6), OUT(6), PAR(5)
      DIMENSION INFO(15)

       INTEGER ErrStat, IOPT, NI, NP, ND, INFO, Losses

       REAL hco,hrad,hout,hin,htot,emiss,eff,Cmin,PAR,Mdct
      REAL Mai,Mboxes,Mzones,Mlus

       CHARACTER*3 YCHECK(6), OCHECK(6)

CPW20030418 Add next line to define I/O units
      COMMON /LUNITS/LUR,LUW,IFORM,LUK

       DATA YCHECK/'TE1','MF2','MF2','TE1','DM1','TE1'/
      DATA OCHECK/'TE1','MF2','MF2','PW2','PW2','DM1'/
      DATA PATM/101325.0/,CPAIR/1006.0/,pi /3.141592654/,
     & RAIR/287.055/, TABSADD/273.15/,SIGMA/.00000005669/
      DATA itmax/50/

CPW20030417 Added next line to initialize ErrStat
      ErrStat = 0

      IOPT = -1.
      NI      = 6. !CORRECT NUMBER OF INPUTS
      NP  = 5. !CORRECT NUMBER OF PARAMETERS
      ND  = 0. !CORRECT NUMBER OF DERIVATIVES

      Tai     = XIN(1)
      Mai     = XIN(2)
      Mlus    = XIN(3)
      Tpl     = XIN(4)
      Xlds    = XIN(5)
      TKGds   = XIN(6)

      Ddct    = PAR(1)
      Ldct    = PAR(2)
```

```
      Ndct    = PAR(3)
      Rdct    = PAR(4)
      Losses  = PAR(5)

      IF (INFO(7).EQ.-1) THEN
        CALL TYPECK(IOPT,INFO,NI,NP,ND)
C CHECKS #S IN USER SUPLLIED INFO ARRAY W/ NI, NP, AND ND
        CALL RCHECK(INFO,YCHECK,OCHECK)
C     CHECKS TO SEE IF THE UNITS ARE CONSISTENT
        INFO(6)=5
      ENDIF

      IF (Losses .EQ. 0 .OR. Mai .EQ. 0) THEN
        Qcond =0.
        Qleak =0.
        Tao =Tai
        Mboxes =Mai
        Mzones =Mai
      ELSEIF (Losses .EQ. 1) THEN
        Mboxes=Mai-Mlus
        Mzones=Mboxes*(1-Xlds)
        Tao=Tai
        Tlds=TKGds/Mboxes
        Qcond=0
        Qlus=Mlus*CPAIR*(Tpl-Tai)
        Qlds=Xlds*Mboxes*CPAIR*(Tpl-Tlds)
        Qleak=Qlus+Qlds
      ELSEIF (Losses .EQ. 2) THEN
        Mboxes=Mai-Mlus
        emiss=.80
        SV=.8131
C1*** Determine average duct flow rate based on 1/2 total losses
        Mdct=(Mboxes+.5*Mlus)/Ndct
        Talm=Tai
        Taold=Tai+.5   !First guess at log mean air temp
C1*** Forced convection,turbulent flow
        v=(Mdct*SV*4)/(pi*(Ddct**2))
        hin=8.80*((v**4)/Ddct)**(1/5)

        DO 100 iter = 1 ,itmax
C1*** Calculate heat transfer coefficients based on avg. temp
C2*** Free convection, turbulent flow
          hco=1.24*((Tpl-Talm)**(1/3))
          hrad=4*sigma*emiss*((((Talm+Tpl)/2)+273)**3)
          hout=1/((1/hco)+(1/hrad))
C2*** Overall heat transfer coefficient from duct air stream to surroundings
          Rtot=(1/hout)+Rdct+(1/hin)
          htot=1/Rtot
C1*** Conduction gain based on effectiveness-NTU method
C2*** Effectiveness based on m*CP air in plenum is infinite
          UA=htot*pi*Ddct*Ldct
          Cmin=Mdct*CPAIR
          eff=1-exp(-UA/Cmin)
          Qdc =eff*Cmin*(Tpl-Tai)
C1*** Calculate log mean temperature
          Taold=Talm
          Talm=Tpl-(Qdc/UA)
          error=Talm-Taold
          Talm = XITERATE(Talm,error,X1,F1,X2,F2,iter,icvg)
C1*** If converged, leave loop
          IF (icvg .EQ. 1) GO TO 999
  100   CONTINUE

C1*** If not converged after itmax iterations, return error code
        WRITE(LUW,105) itmax
  105   FORMAT(/1X,'*** ERROR IN SUBROUTINE DUCT_LEAK ***'/
```

```
   &          1X,'    Temperature has not converged after',I2,
   &          '  iterations'/)
      ErrStat = 1

999   CONTINUE

      Qcond=Qdc*Ndct
      Qlus=Mlus*CPAIR*(Tpl-Talm)
      Qlds=Xlds*Mboxes*CPAIR*(Tpl-Tlds)
      Qleak=Qlus+Qlds
      Tao=Tai+(Qdc/Cmin)
    ENDIF

    OUT(1) = Tao
    OUT(2) = Mboxes
    OUT(3) = Mzones
    OUT(4) = Qcond
    OUT(5) = Qleak
    OUT(6) = ERRSTAT

    RETURN 1
    END
```

Subroutine TYPE 86: VAV Box and Downstream Ducts

SUBROUTINE AND FUNCTION CALL MAPPING

```
Zone Box w/ Downstream Leakage - Calculate the performance of a heating
C*                coil by modeling as a crossflow, both
C*                streams unmixed, heat exchanger. Results
C*                include outlet air temperature and
C*                humidity, outlet water temperature,
C*                sensible and total cooling capacities.
         SUBROUTINE TYPE86 (TIME,XIN,OUT,T,DTDT,PAR,INFO,ICNTRL,*)
            CALL TYPECK(IOPT,INFO,NI,NP,ND) -- subroutine in TRNWIN\Kernal\typeck.for
            CALL RCHECK(INFO,YCHECK,OCHECK) -- subroutine in TRNWIN\Kernal\rcheck.for

            UATot = UAHX(capAir,TAirRat,capLiq,TLiqRat,QTotRat, -- function F1
                                                                   in type 75
     &             configHX,ErrStat)
            CALL DRYCOIL (Prop,MLiq,TLiqEnt,MAir,TAirEnt,WAirEnt, -- subroutine S1
                                                                     in type 75
     &              UATot,configHX,
     &              TLiqLvg,TAirLvg,WAirLvg,QTot,ErrStat)
            mLiq = XITERATE(mLiq,error,X1,F1,X2,F2,iter,icvg) -- function F14
                                                                 in type 75

      1 PROP(PATM)     =  101325.0       Atmospheric pressure (Pa)
      2 PROP(CPAIR)    =    1006.0       Specific heat of dry air (J/kg C)
      3 PROP(CPWAT)    =    4186.0       Specific heat of liquid water (J/kg C)
      4 PROP(CPVAP)    =    1805.0       Specific heat of saturated water
                                         vapor (J/kg C)
      5 PROP(CPLIQ)    =    4186.0
      6 PROP(DVISCAIR) =        .0000182 Air dynamic viscosity (kg/m s)
      7 PROP(DVISCLIQ) =        .00144   Liquid dynamic viscosity (kg/m s)
      8 PROP(KAIR)     =        .026     Air thermal conductivity (W/m C)
      9 PROP(KLIQ)     =        .604     Liquid thermal conductivity (W/m C)
     10 PROP(RHOLIQ)   =     998.0       Liquid density (kg/m3)
     11 PROP(HFG)      = 2501000.0       Latent heat of vaporization of water (J/kg)
     12 PROP(RAIR)     =     287.055     Gas constant for air (J/kg C)
     13 PROP(TKELMULT) =       1.0       Multiplying factor to convert user
                                         T to Kelvin
     14 PROP(TABSADD)  =     273.15      Additive factor to convert user P to Kelvin:
                                         tKel = Prop(TKelMult)*T + Prop(TKelAdd)
     15 PROP(PAMULT)   =       1.0       Multiplying factor to convert user P to
                                         Pascals
     16 PROP(PABSADD)  =       0.0       Additive factor to convert user P to Pascals:
                                         Pa = Prop(PaMult)*P + Prop(PaAdd)
```

SOURCE CODE

```
      SUBROUTINE TYPE86 (TIME,XIN,OUT,T,DTDT,PAR,INFO,ICNTRL,*)

C*********************************************************************

C*     Thermal Distribution System Model by EMFranconi

C*********************************************************************

C*    SUBROUTINE: Zone Box w/ Downstream Leakage

C*

C*    LANGUAGE:   FORTRAN 77

C*

C*    PURPOSE:    Calculate the performance of a heating
```

```
C*                coil by modeling as a crossflow, both

C*                streams unmixed, heat exchanger. Results

C*                include outlet air temperature and

C*                humidity, outlet water temperature,

C*                sensible and total cooling capacities.

C*********************************************************************

C*    INPUT VARIABLES  DESCRIPTION(UNITS)                      SAMPLE VALUES

C*    XIN(1)     MLiq Liquid mass flow rate(kg/s)                    1.6

C*    XIN(2)  TLiqEnt Entering water temperature(C)                 62.2

C*    XIN(3)  MAirEnt Entering air mass flow rate (kg/s)             2.0

C*    XIN(4)  TAirEnt Entering air dry bulb temperature(C)          15.60
C*    XIN(5)  WAirEnt Entering air humidity ratio(-)                  .008

C*    XIN(6)    Tzone Zone temperature (C)                          25.0
C*    XIN(7)    QsenZ Zone sensible load (W)
C*    XIN(8)       lf Leakage fraction based on Mvav
C*

C*    OUTPUT VARIABLES

C*    OUT(1)  TLiqLvg Leaving water temperature(C)                 54.1365

C*    OUT(2)     MLiq Liquid flowrate (kg/s)                         0.8
C*    OUT(3)  TAirLvg Leaving air dry bulb temperature(C)           33.9

C*    OUT(4)  WAirLvg Leaving air humidity ratio(-)                   .008

C*    OUT(5)     MAir Box flowrate (kg/s)                           1.8
C*    OUT(6)    QSenC Sensible heat transfer rate(W)            -54005.8

C*    OUT(7)     TKGz Weighted zone air temperature                 45.0
C*    OUT(8)   LdsErr Zone load not met (0 or 1)                     0.0
C*    OUT(9)     Qcrh Reheat load when cooling                       0.0
C*    OUT(10)    Qhrh Reheat load when heating                       0.0
C*    OUT(11)    TKGb Weighted box air temperature                  45.0
C*    OUT(12) ErrStat Error status indicator,0=ok,1=error(-)         0.0
C*

C*    PARAMETERS

C*    PAR(1)  QTotRat Total heat transfer at rating(W)           44000.0

C*    PAR(2)  MLiqRat Liquid mass flow rate at rating(kg/s)          1.87

C*    PAR(3)  TLiqRat Entering water temperature at rating(C)       48.90

C*    PAR(4)  MAirRat Dry air mass flow rate at rating(kg/s)         6.8

C*    PAR(5)  TAirRat Entering air dry bulb temperature at rating(C) 15.6

C*    PAR(6)  WAirRat Entering air humidity ratio at rating(-)        .007

C*    PAR(7) Zone Box 1=CAV, 2=VAV                                   1
C*    PAR(8)      VAV turndown (%)                                  30.
C*
```

```
C*    PROPERTIES
C*    CpAir         Specific heat of dry air                    (J/kg C)
C*    CpLiq         Specific heat of liquid                     (J/kg C)
C*    CpVap         Specific heat of water vapor                (J/kg C)
C*********************************************************************
C     MAJOR RESTRICTIONS:     Models coil using effectiveness Ntu model
C                             as crossflow heat exchanger with both
C                             streams unmixed
C
C     DEVELOPER:              Shauna Gabel
C                             Michael J. Brandemuehl, PhD, PE
C                             University of Colorado at Boulder
C
C     DATE:                   January 1, 1992
C
C     INCLUDE FILES:          hcsim.inc
C                             prop.inc
C     SUBROUTINES CALLED:     DRYCOIL
C     FUNCTIONS CALLED:       None
C
C     REVISION HISTORY:       CPW20030418
C
C     REFERENCE:              None
C*********************************************************************
C     INTERNAL VARIABLES:
C     P(UATot)      Overall heat transfer coefficient             (W/C)
C     capAir        Air-side capacity rate                        (W/C)
C     capLiq        Water-side capacity rate                      (W/C)
C*********************************************************************
      DOUBLE PRECISION XIN, OUT
      INTEGER Patm,CpAir,CpWat,CpLiq,CpVap,DViscAir,
     &        DViscLiq,KAir,KLiq,RhoLiq,Hfg,RAir
     &        TKelMult,TAbsAdd,PaMult,PAbsAdd,iter,itmax
```

```
      INTEGER INFO,IOPT,NI,NP,ND,BOXTYPE,REHEAT

      REAL Prop(16),PAR,MLiqRat,MAirRat,MLiq,MAir,MinRate,
     &     LdsErr,MAirMin,TKGz,TKGb,Qcrh,Qhrh,lf

      DIMENSION XIN(8),OUT(12),PAR(8),INFO(15)

      CHARACTER*3 YCHECK(8),OCHECK(12)

CPW20030418 Add next line to define I/O units

      COMMON /LUNITS/LUR,LUW,IFORM,LUK

      PARAMETER (Patm     = 1)

      PARAMETER (CpAir    = 2)

      PARAMETER (CpWat    = 3)

      PARAMETER (CpVap    = 4)

      PARAMETER (CpLiq    = 5)

      PARAMETER (DViscAir = 6)

      PARAMETER (DViscLiq = 7)

      PARAMETER (KAir     = 8)

      PARAMETER (KLiq     = 9)

      PARAMETER (RhoLiq   = 10)

      PARAMETER (Hfg      = 11)

      PARAMETER (RAir     = 12)

      PARAMETER (TKelMult = 13)

      PARAMETER (TAbsAdd  = 14)

      PARAMETER (PaMult   = 15)

      PARAMETER (PAbsAdd  = 16)

      PROP(PATM)     =  101325.0

      PROP(CPAIR)    =    1006.0

      PROP(CPWAT)    =    4186.0

      PROP(CPVAP)    =    1805.0

      PROP(CPLIQ)    =    4186.0

      PROP(DVISCAIR) =        .0000182

      PROP(DVISCLIQ) =        .00144

      PROP(KAIR)     =        .026

      PROP(KLIQ)     =        .604

      PROP(RHOLIQ)   =     998.0

      PROP(HFG)      = 2501000.0
```

```
      PROP(RAIR)     =     287.055

      PROP(TKELMULT) =       1.0

      PROP(TABSADD)  =     273.15

      PROP(PAMULT)   =       1.0

      PROP(PABSADD)  =       0.0

      MLIQ    = XIN(1)

      TLIQENT = XIN(2)

      MAIR    = XIN(3)
      TAIRENT = XIN(4)

      WAIRENT = XIN(5)

      TZONE   = XIN(6)
      QSENZ   = XIN(7)
      LF      = XIN(8)

      QTOTRAT = PAR(1)

      MLIQRAT = PAR(2)

      TLIQRAT = PAR(3)

      MAIRRAT = PAR(4)

      TAIRRAT = PAR(5)

      WAIRRAT = PAR(6)

      BOXTYPE = PAR(7)

      MINRATE = PAR(8)

      DATA configHX/3./
      DATA YCHECK/'MF2','TE1','MF2','TE1','DM1','TE1','PW2','DM1'/
      DATA OCHECK/'TE1','MF2','TE1','DM1','MF2','PW2','DM1','DM1','PW2',
     &     'PW2','DM1','DM1'/

      DATA itmax/40/

      ErrStat = 0

      IOPT = -1

      NI  = 8  !CORRECT NUMBER OF INPUTS
      NP  = 8  !CORRECT NUMBER OF PARAMETERS
      ND  = 0  !CORRECT NUMBER OF DERIVATIVES

      IF (INFO(7).EQ.-1) THEN
        CALL TYPECK(IOPT,INFO,NI,NP,ND)
C  CHECKS TO SEE IF USER'S INFO MATCHES CORRECT NUMBER
        CALL RCHECK(INFO,YCHECK,OCHECK)
C  CHECKS TO SEE IF INPUT AND OUTPUT UNITS MATCH
        INFO(6)=11
      ENDIF

C1*** If QsenZ is zero, fan is off. Set flow to zero and return
      IF (Qsenz .EQ. 0.) THEN
        TLIQLVG=TLIQENT
```

```
        MLIQ=0.
        TAIRLVG=TAIRENT
        WAIRLVG=WAIRENT
        MAIR=0
        QSENC=0
        TKGz=0
        TKGb=0
        LdsErr=0
        Qcrh=0
        Qhrh=0
        GO TO 9999
C1*** If Qsenz is not zero but supply temp is zero - reset
      ELSEIF (TAIRENT .EQ. -99) THEN
        TAIRENT = 12.8
        WAIRENT =   .008
      ENDIF

C2*********************************************************************

C2    The code between these bars of asterisks is used to set internal

C2    parameters and is independent of component input values.  In an

C2    hourly simulation, this block of code may be skipped after the

C2    first call.

C1*** Calculate overall heat transfer coefficient from fluid states

C1*** and known total heat transfer

      capAir = MAirRat * (Prop(CpAir)+WAirRat*Prop(CpVap))

      capLiq = MLiqRat * Prop(CpLiq)

      UATot = UAHX(capAir,TAirRat,capLiq,TLiqRat,QTotRat,

     &             configHX,ErrStat)

C2*********************************************************************

C1*** Calculate box flowrate and delivery temp

      MAirMin= MAirRat
      REHEAT = 0

C2*** Calculations are based on air delivered to zone
C2*** Mzone = (1-lf)*Mair
      IF (BOXTYPE .EQ. 1) THEN
        Tzs=Tzone-(QsenZ/(MAir*(1-lf)*Prop(CpAir)))
        REHEAT=1
      ELSEIF (BOXTYPE .EQ. 2)  THEN
        MAir=-QsenZ/((1-lf)*Prop(CpAir)*(TAirEnt-Tzone))
        Tzs=TAirEnt
        IF (MAir < MAirMin)  THEN
          MAir=MAirMin
          Tzs=Tzone-(QsenZ/(MAir*(1-lf)*Prop(CpAir)))
          REHEAT=1
        ENDIF
      ENDIF

C3*** FLAG TO INDICATE COOL LOAD NOT MET
      IF (Tzs < TAirEnt) THEN
        Tzs = TAirEnt
        LdsErr=1
      ELSE
```

```
        LdsErr=0
      ENDIF

C1*** End zone flowrate and delivery temp calculations
C1*** CALCULATE WEIGHTED ZONE TEMP FOR DOWNSTREAM LEAKAGE Q TO PLENUM CALC
      TKGz=Mair*(1-lf)*Tzone

C1*** CALCULATE WEIGHTED ZONE TEMP FOR RETURN AIR CALC
      TKGb=Mair*Tzs

C1*** BEGIN COIL LOOP
      IF (REHEAT)  THEN
        DO 100 iter = 1 ,itmax
          CALL DRYCOIL (Prop,MLiq,TLiqEnt,MAir,TAirEnt,WAirEnt,

     &              UATot,configHX,

     &              TLiqLvg,TAirLvg,WAirLvg,QTot,ErrStat)

          QSenC = QTot

C1*** Compare given leaving air temperature with estimated temperature
C1*** and determine new estimate of flow
          error = TAirLvg-Tzs
          mLiq = XITERATE(mLiq,error,X1,F1,X2,F2,iter,icvg)

C1*** If converged, leave loop
          IF (icvg .EQ. 1) GO TO 999

C1*** If estimated flow is less than zero, set to small number
          IF(MLiq.LT.0) MLiq = 0.
  100   CONTINUE

      ELSE
        MLIQ=0.
        TLIQLVG=TLIQENT
        TAIRLVG=TAIRENT
        WAIRLVG=WAIRENT
        QSENC=0.
        GO TO 999
      ENDIF

C1*** If not converged after itmax iterations, return error code
      WRITE(LUW,1005) itmax
 1005 FORMAT(/1X,'*** ERROR IN SUBROUTINE ZONE_BOX ***'/
     &        1X,'    Temperature has not converged after',I2,
     &        '  iterations'/)
      ErrStat = 1


 999  CONTINUE

C1*** Tally Qcoil when zone requires heating or cooling
      IF (REHEAT) THEN
        IF(QsenZ .LT. 0) THEN
          Qhrh=QSenC
          Qcrh=0.
        ELSEIF (QsenZ .GT. 0) THEN
          Qhrh=0.
          Qcrh=QSenC
        ELSE
          Qhrh=0.
          Qcrh=0.
        ENDIF
      ELSE
        Qhrh=0.
```

```
        Qcrh=0.
      ENDIF

9999  CONTINUE

      OUT(1) = TLIQLVG
      OUT(2) = MLIQ

      OUT(3) = TAIRLVG

      OUT(4) = WAIRLVG
      OUT(5) = MAIR

      OUT(6) = QSENC
      OUT(7) = TKGz

      OUT(8) = LdsErr
      OUT(9) = Qcrh
      OUT(10) = Qhrh

      OUT(11) = TKGb
      OUT(12) = ERRSTAT



      RETURN 1

      END
```